10009777675

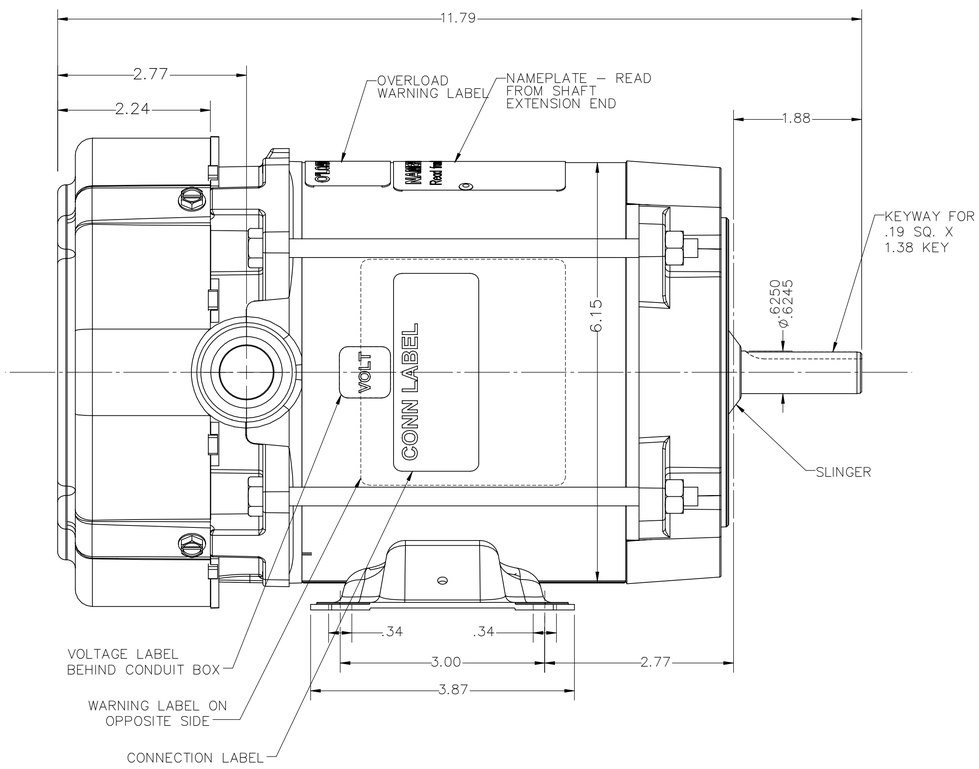

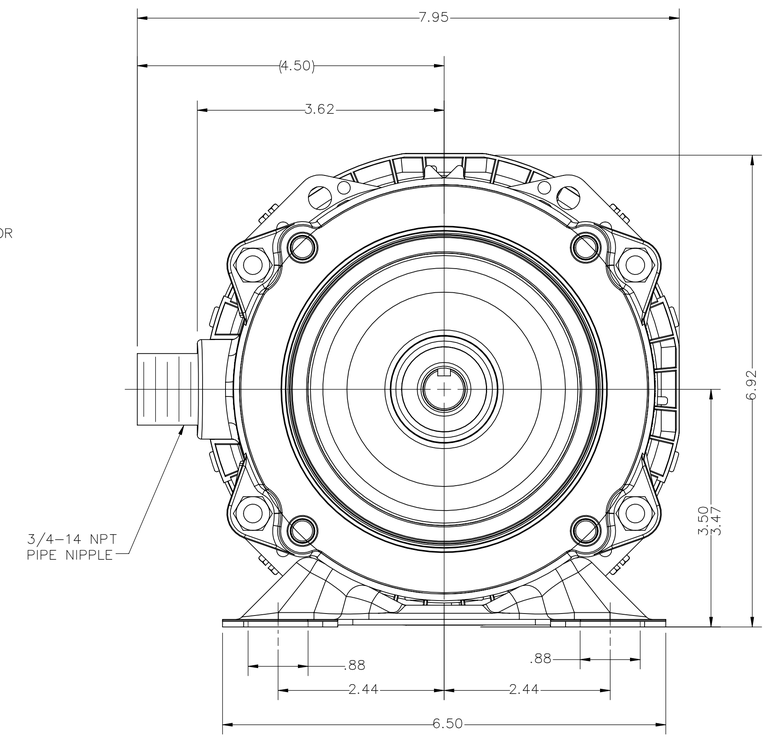

UNLESS OTHERWISE SPECIFIED DIMENSIONS WITHOUT TOLERANCES ARE REFERENCE ONLY

NOTES

1. CONDUIT BOX SHIPPED UNASSEMBLED

LEADS

24" +2–0" WITH .44" STRIPPING FROM CONDUIT HUB

EXTERNAL CONNECTIONS

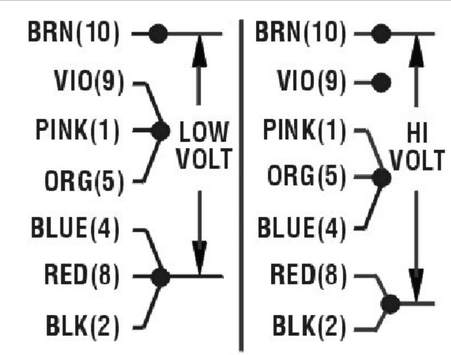

TO REVERSE, INTERCHANGE ORANGE(5) AND RED (8).

MOTOR DATA

TYPE	CSIR			SHAFT MATERIAL	CRS			CUSTOMER NAME	WEG
HZ	60	HZ		FRAME	56	PHASE	1	CUSTOMER PART NUMBER	.3336XS1B56
VOLTS	115/208–230	VOLTS		ENCLOSURE	TEFC–XP	PAINT	GRAY	VIEWING LEAD END: MOTOR ROTATION	REV
HP 0.33	SF 1.0	HP –	SF	ENVIRONMENT	NORMAL	BEARINGS	BALL	VIEWING LEAD END: ASSEMBLY ROTATION	CW
RPM	3450	RPM –		I.P.CODE	IP55	END CAP	N/R	ASSEMBLY VOLTAGE	HIGH
F.L. AMPS	5.2/2.6	F.L. AMPS		NEMA NOM. EFF.	%	IE3	%	THERMAL PROTECTION TYPE	AUTOMATIC
S.F. AMPS	–	S.F. AMPS	–					MOUNTING POSITION	HORIZONTAL
				MOTOR IS LISTED FOR HAZARDOUS LOCATIONS				WINDING AND TEST SPEC	337571
TIME RATE	CONT	MAX AMB	50	CLASS	I – II	TEMP CODE	T3B	DRAWN: IT 12/02/23	RELEASED:
KVA CODE	M	INS CLASS	F	GROUP	C,D – E,F,G			APPROVED:	

ECN	REV	CHANGE DESCRIPTION	DATE/ INITIALS
	002	REDRAWN IN SOLIDWORKS; UPDATED EXT. CONN	12/02/23 IT

THE INFORMATION DISCLOSED HEREIN INCLUDES ROPRIETARY RIGHTS OF WEG. ANY REPRODUCTION OR TRANSFERRAL OF INFORMATION FROM THIS DOCUMENT IS FORBIDDEN WITHOUT PRIOR CONSENT.

SIZE	DWG NO.	
D	10009777675	
SCALE: 1:1	DO NOT SCALE DRAWING	SHEET 1 OF 1

10009777675