1311007483

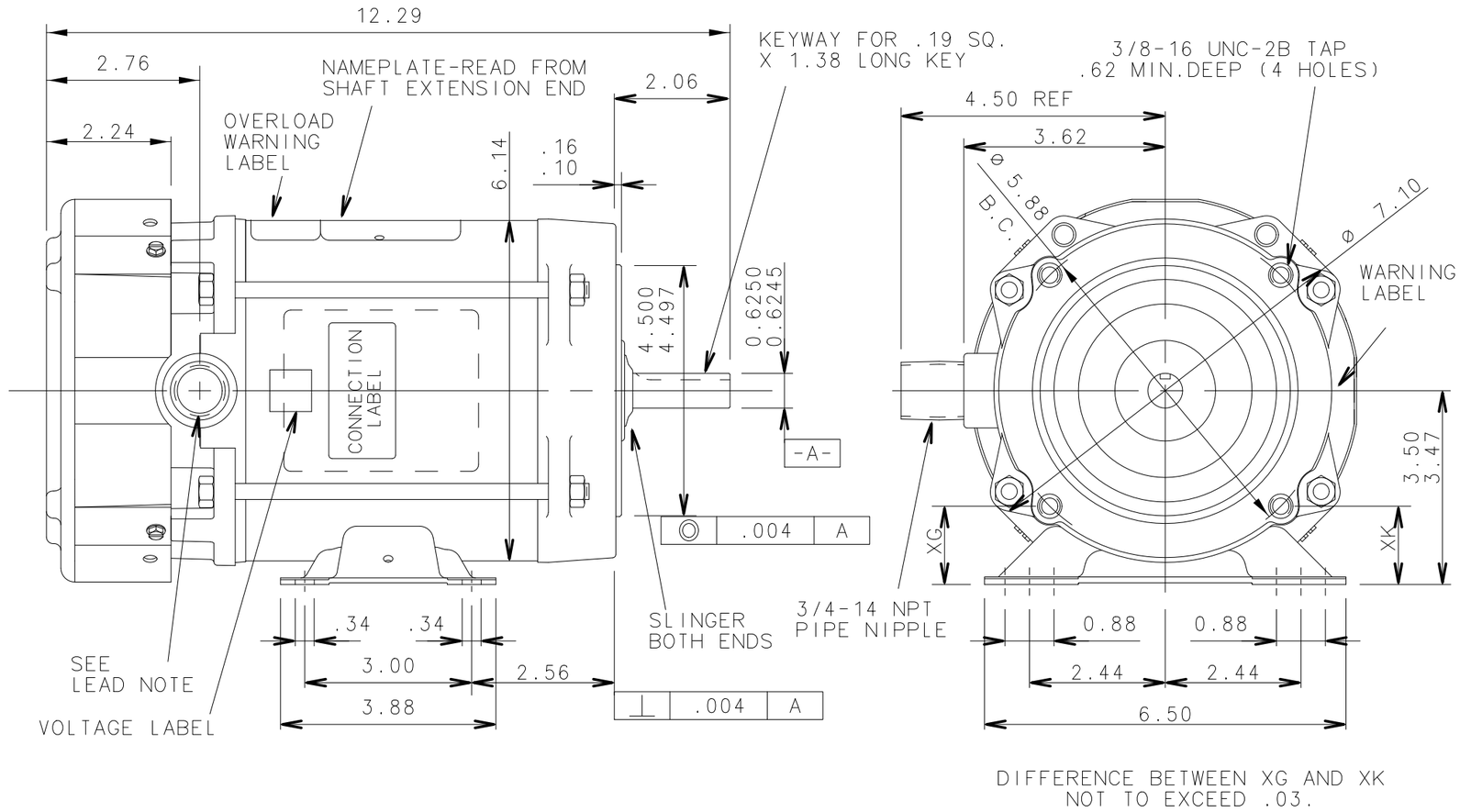

DIFFERENCE BETWEEN XG AND XK NOT TO EXCEED .03.

UNLESS OTHERWISE SPECIFIED DIMENSIONS WITHOUT TOLERANCES ARE REFERENCE ONLY

NOTES

1. MOTOR LISTED FOR HAZARDOUS LOCATION - CLASS I, GROUP C,D AND CLASS II, GROUP E,F,G.
2. CONDUIT BOX IS SUPPLIED AS UNASSEMBLED ITEM WITH MOTOR
3. 50HZ NAMEPLATE DATA
   - HP .50
   - V 190/380
   - RPM 1425
   - FLA 2.4/1.2
   - SF 1.0

LEADS

24"+2-0
FROM CONDUIT HUB
WITH .44 STRIPPING

EXTERNAL CONNECTIONS

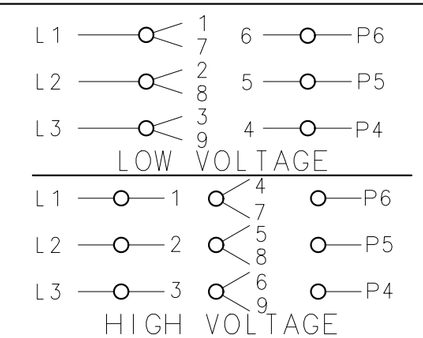

MOTOR DATA

TYPE	POLYPHASE			ENCLOSURE	TEFC-XPL	VIEWING LEAD END	MOTOR ROTATION REV
HP	3/4			BEARINGS	BALL		ASSEMBLY ROTATION REV
PH	3	HZ	60/50	PAINT	GRAY	ASSEMBLY VOLTAGE	HIGH
RPM	1725/1425	SF	1.0	MOUNTING POSITION	HORIZONTAL	THERMALLY PROTECTED	AUTOMATIC
VOLTS	208-230/460			END CAP	CANOPY	WINDING AND TEST SPEC	330283
F.L. AMPS	2.7/1.35			ENVIRONMENTAL CONDITION	NORMAL	CUSTOMER NAME	WEG
S.F. AMPS	.			SHAFT MATERIAL	COLD ROLLED STEEL	CUSTOMER PART NO.	.7518XS3E56C
FRAME	56C	TEMP CODE	T3B			DRAWN	GWB 5-8-13
TIME RATE	CONT	MAX.AMB.	50°C			APPROVED	.
KVA CODE	L	INS. CLASS	F			RELEASED	.

PAR NO ECN NO	REV NO	CHANGE	FILM	DATE INIT
118030	4	WTS WAS 334188		TA 6/24/21

THE INFORMATION DISCLOSED HEREIN INCLUDES PROPRIETARY RIGHTS OF WEG. ANY REPRODUCTION OR TRANSFERRAL OF INFORMATION FROM THIS DOCUMENT IS FORBIDDEN WITHOUT PRIOR CONSENT.

MODEL NUMBER

1311007483

DIST: 3-21(2)-26-31-35