No reproduction of this drawing is allowed written permission of WEG Motores

| EIXO | |
|---|---|
| PADRÃO | |
| OPCIONAL | |
| ESPECIAL | X |

Dimensões em polegadas
Dimensions in inches

CERTIFIED
WEG MOTORES
Certified document.
Not subject to changes.

THIS IS AN UPDATED REVISION, THE PREVIOUS ONE MUST BE DISREGARDED.

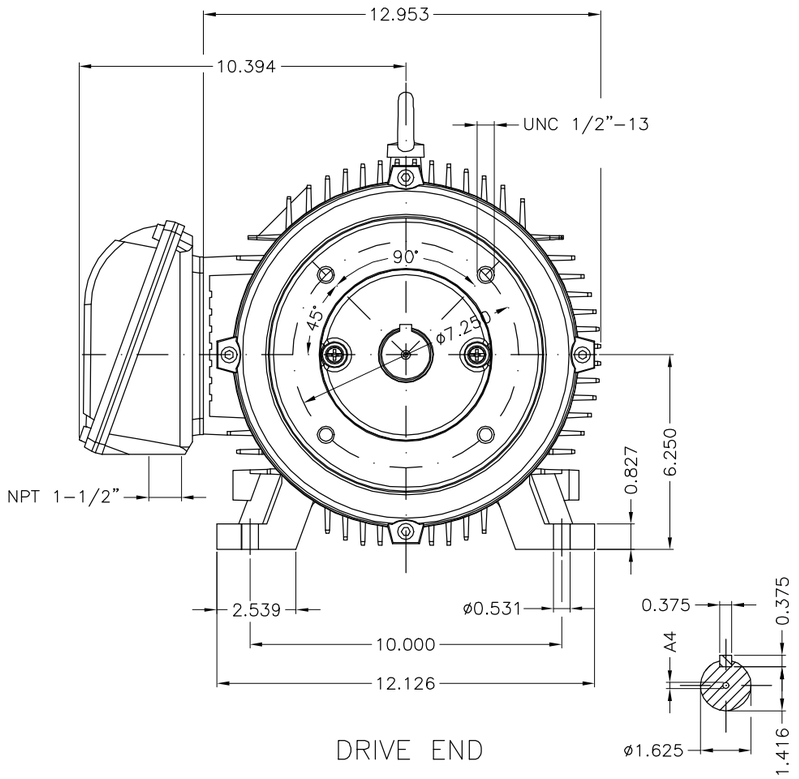


DRIVE END

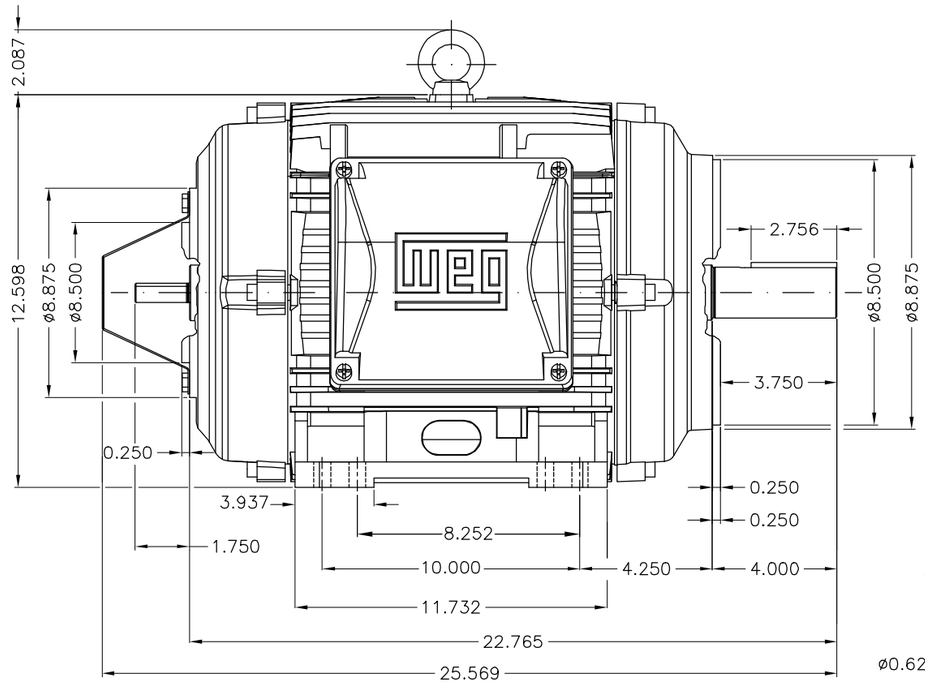


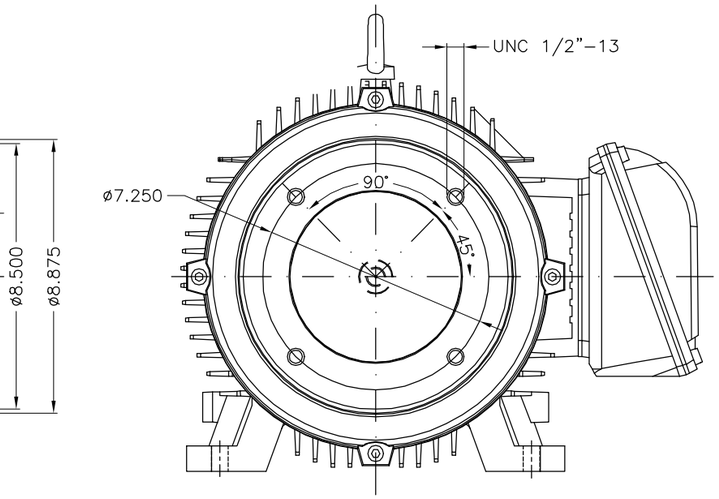


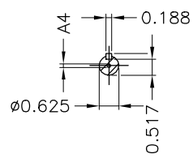


NON DRIVE END

Rodamiento esferas delantero 6309 / 6309 DE ball bearing
Rodamiento trasero delantero 6309 / 6309 NDE ball bearing
Rodamientos esferas con huelga C3 / Ball bearings with C3 clearance

WEG MEXICO

| ECM | LOC | SUMMARY OF MODIFICATIONS | EXECUTED | CHECKED | RELEASED | DATE | VER |
|---|---|---|---|---|---|---|---|
| 500001281260 | | ACCORDING TO 414351734 | VJIMENEZ | | JUANL | 25.04.2017 | 03 |
| 500001019834 | | CHANGES ACCORDING TO ECM | OLOPEZ | | AZUE | 06.04.2015 | 02 |

| | | | |
|---|---|---|---|
| EXECUTED | JOSEHM | THREE PHASE MOTOTR | 10001945412 |
| CHECKED | | FRAME 254/6TC IP55 | 000 / 04 |
| RELEASED | JOSEHM | | |
| REL DT | 12.10.2012 | WMX HUEHUETOCA INGENIERA DEL PRODUCTO | SHEET 1 / 1 |

15 HP 04 Poles 60 Hz 413684488/02

A

UNCONTROLLED COPY

RELEASED

ZME A3

WEG's property. Forbidden reproduction without previous authorization.