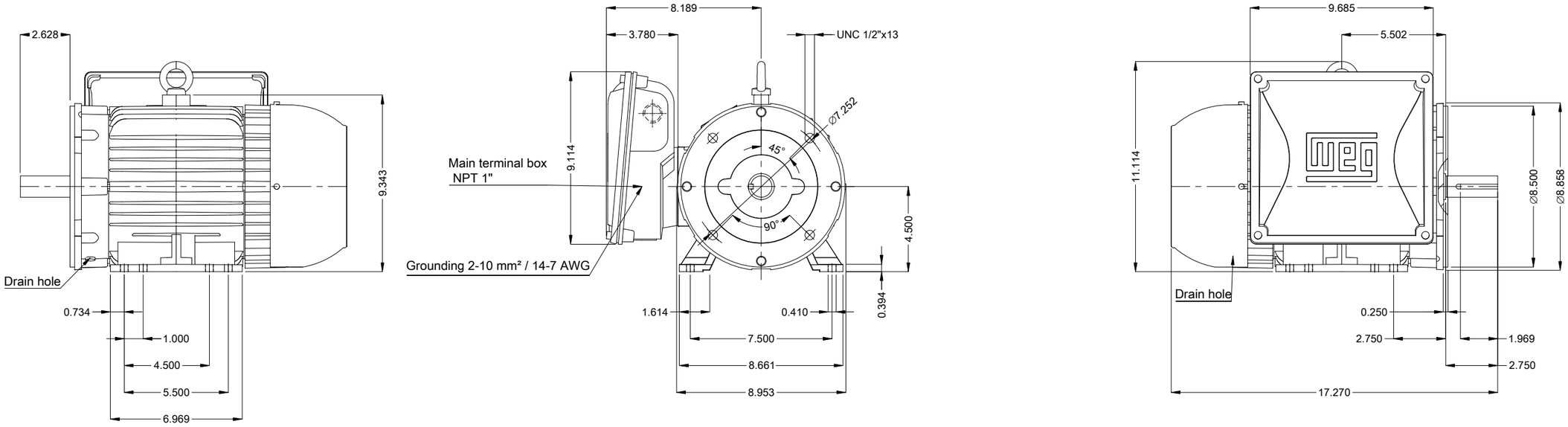

DE Shaft End

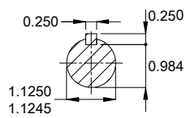

Color RAL 7022

Mounting NEMA F-1

Mounting B34D

1.5 HP 06 Poles 60 Hz | A

V.J. PAMENSKY CANADA INC.

Scale 1 : 6

ECM	LOC	SUMMARY OF MODIFICATIONS	EXECUTED	CHECKED	RELEASED	DATE	VER
			PIRWBUSER				00

EXECUTED	PIRWBUSER
CHECKED	
RELEASED	
REL. DATE	

SINGLE PH. MOTOR W22
FRAME 182/4TC IP55 TEFC

PREVIEW

WDD 00

SHEET 1 / 1

Dimensions in inches

A3

WEG's property. Forbidden reproduction without previous authorization.