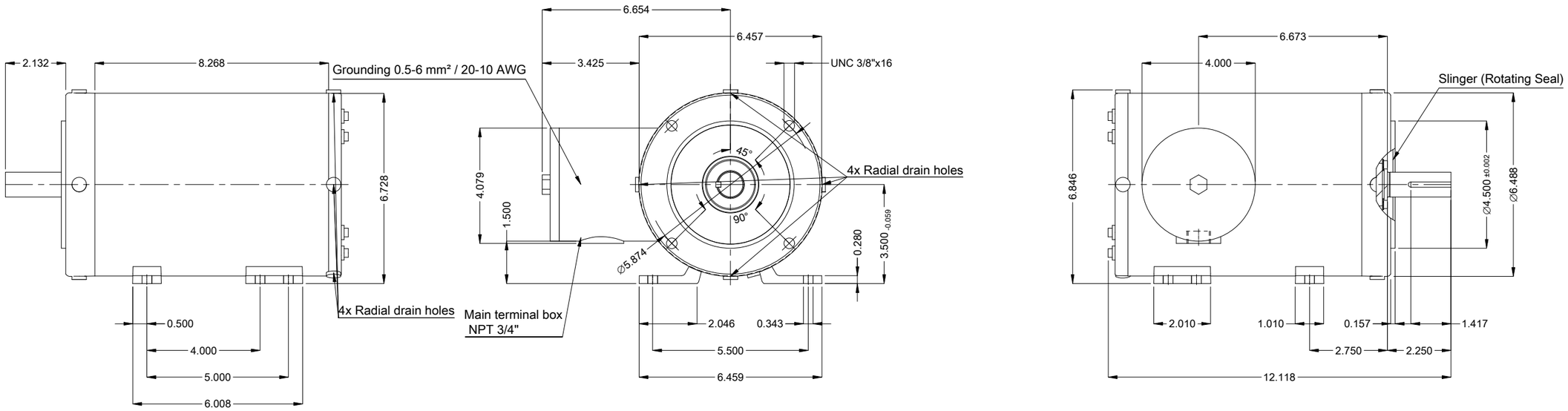

Design B
Dipping impregnation - polyester
Rotation CW and CCW
Shaft material - stainless steel AISI 304
Without overload protector at bearing
Without alarm thermal protection
Without switch off thermal protection
Mounting MARKET F-1/B34R(D)
Mounting B34D

DE Shaft End

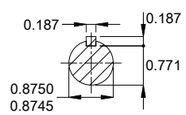

1 HP 04 Poles 60 Hz | A

V.J. PAMENSKY CANADA INC.

Scale 1 : 4

ECM	LOC	SUMMARY OF MODIFICATIONS	EXECUTED	CHECKED	RELEASED	DATE	VER
			PIRWBUSER				00

EXECUTED	PIRWBUSER
CHECKED	
RELEASED	
REL. DATE	

THREE PH. MOTOR NEMA PREM. EFF.
FRAME 143/5TC IP66 TENV

PREVIEW

WDD 00

SHEET 1 / 1

Dimensions in inches

A3

WEG's property. Forbidden reproduction without previous authorization.