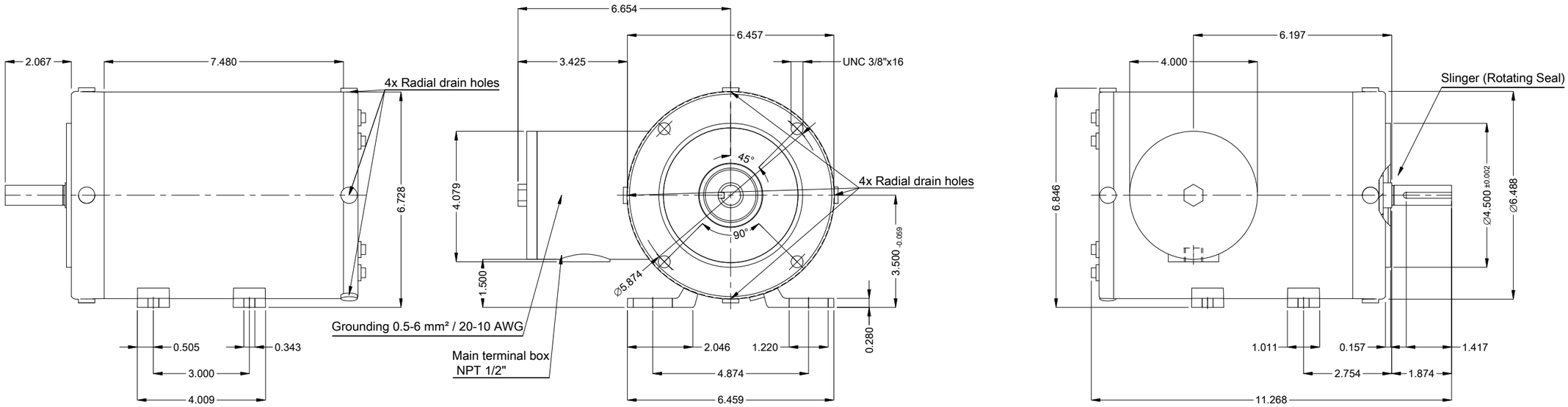

Shaft material - stainless steel AISI 304

Mounting MARKET F-1/B34R(D)

Mounting B34D

DE Shaft End

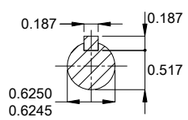

0.5 HP 06 Poles 60 Hz | A

V.J. PAMENSKY CANADA INC.

Scale 2 : 7

ECM	LOC	SUMMARY OF MODIFICATIONS	EXECUTED	CHECKED	RELEASED	DATE	VER
			PIRWBUSER				00

EXECUTED	PIRWBUSER	THREE PH. MOTOR PREM. EFF.
CHECKED		FRAME 56C IP66 TENV
RELEASED		
REL. DATE		

PREVIEW

WDD 00

SHEET 1 / 1

Dimensions in inches

A3

WEG's property. Forbidden reproduction without previous authorization.