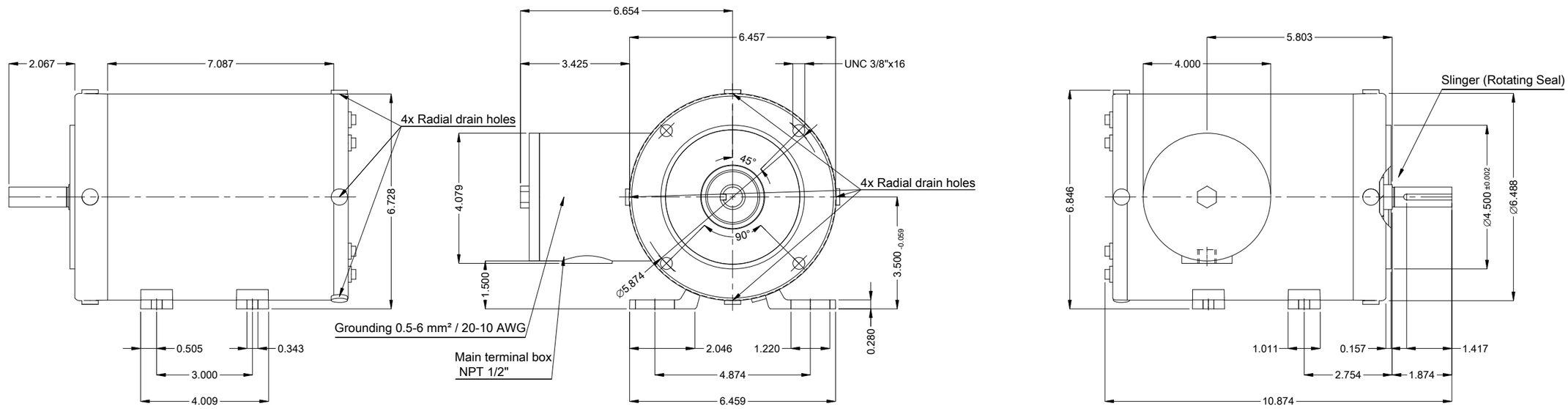


Shaft material - stainless steel AISI 304

Mounting MARKET F-1/B34R(D)

Mounting B34D

DE Shaft End

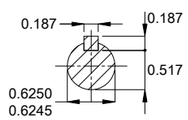


0.5 HP 04 Poles 60 Hz | A

V.J. PAMENSKY CANADA INC.

Scale 2 : 7

| ECM | LOC | SUMMARY OF MODIFICATIONS | EXECUTED | CHECKED | RELEASED | DATE | VER |
|---|---|---|---|---|---|---|---|
| | | | PIRWBUSER | | | | 00 |

| | | |
|---|---|---|
| EXECUTED | PIRWBUSER | THREE PH. MOTOR PREM. EFF. |
| CHECKED | | FRAME 56C IP66 TENV |
| RELEASED | | |
| REL. DATE | | |

PREVIEW

WDD 00

SHEET 1 / 1

Dimensions in inches

A3

WEG's property. Forbidden reproduction without previous authorization.