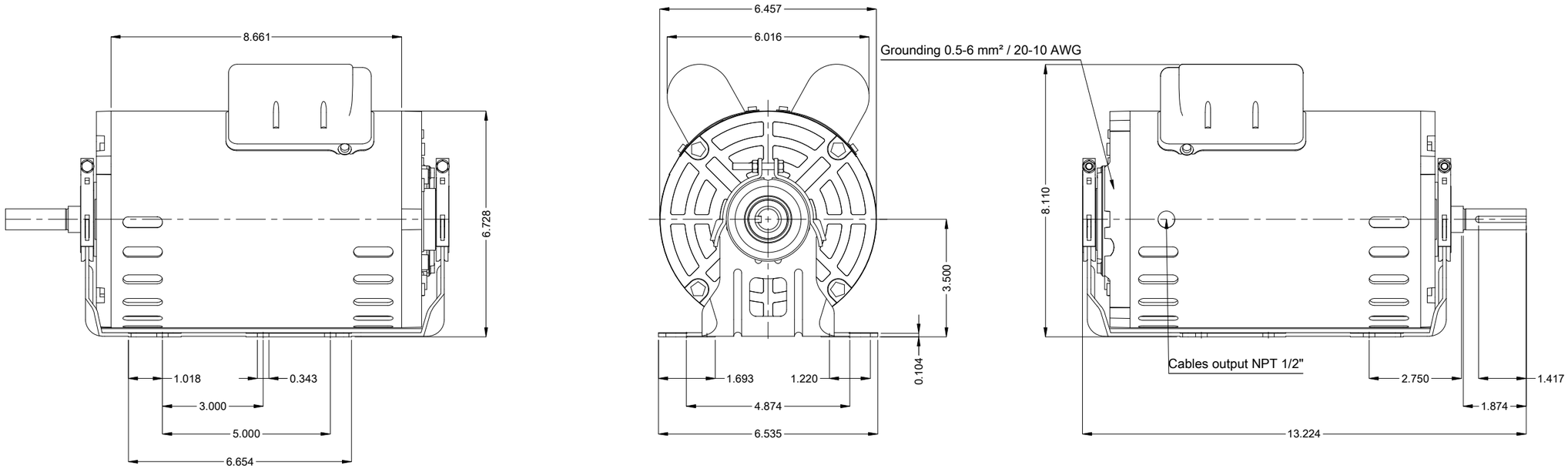

DE Shaft End

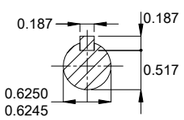

Phenolic thermal protector - automatic

Mounting MARKET F-1/B3R(D)

Mounting F-1/B3R(D)

1 HP 04 Poles 60 Hz | A

V.J. PAMENSKY CANADA INC.

Scale 2 : 7

ECM	LOC	SUMMARY OF MODIFICATIONS	EXECUTED	CHECKED	RELEASED	DATE	VER
			PIRWBUSER				00

EXECUTED	PIRWBUSER
CHECKED	
RELEASED	
REL. DATE	

SINGLE PH. MOTOR ROLLED STEEL FAN / EXHAUST PREM. EFF
FRAME 56H IP21 ODP

PREVIEW

WDD 00

SHEET 1 / 1

Dimensions in inches

A3

WEG's property. Forbidden reproduction without previous authorization.