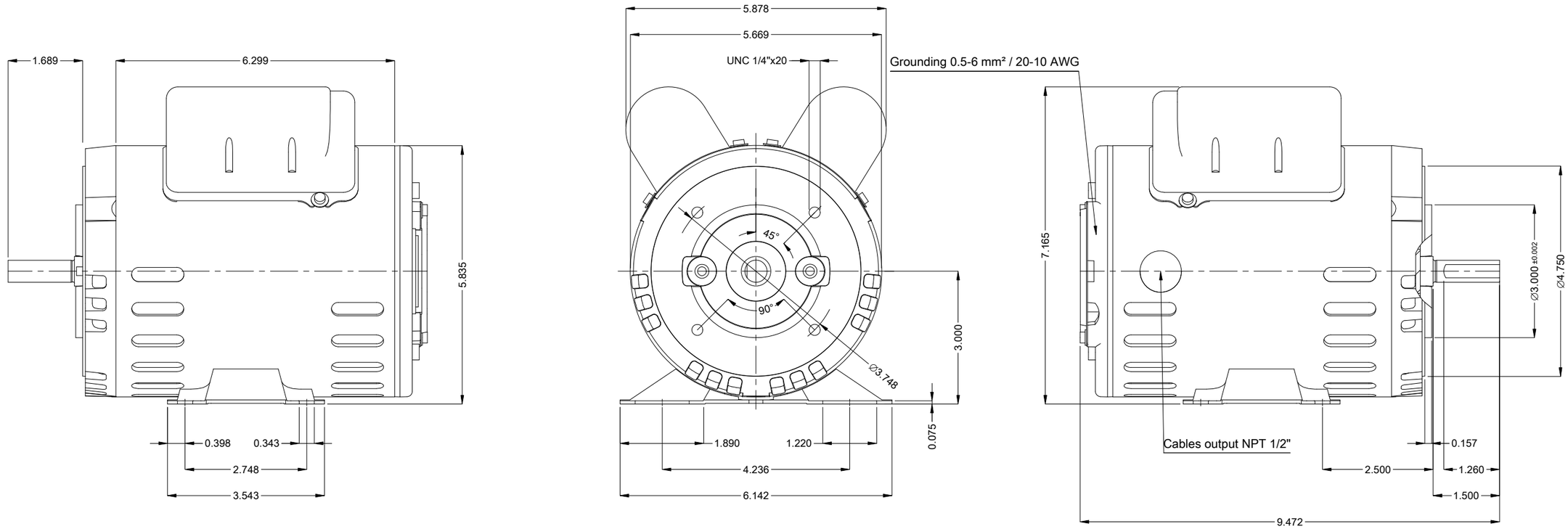


DE Shaft End

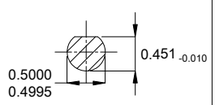


Color Munsell N 1 matte black

Painting plan 207N

Mounting MARKET F-1/B34R(D)

Mounting B34D

0.25 HP 04 Poles 60 Hz

A

Scale 2 : 5

| ECM | LOC | SUMMARY OF MODIFICATIONS | EXECUTED | CHECKED | RELEASED | DATE | VER |
|---|---|---|---|---|---|---|---|
| | | | PIRWBUSER | | | | 00 |

| | |
|---|---|
| EXECUTED | PIRWBUSER |
| CHECKED | |
| RELEASED | |
| REL. DATE | |

SINGLE PH. MOTOR ROLLED STEEL PREM. EFF.

FRAME 48C IP21 ODP

PREVIEW

WDD 00

SHEET 1 / 1

Dimensions in inches

A3

WEG's property. Forbidden reproduction without previous authorization.