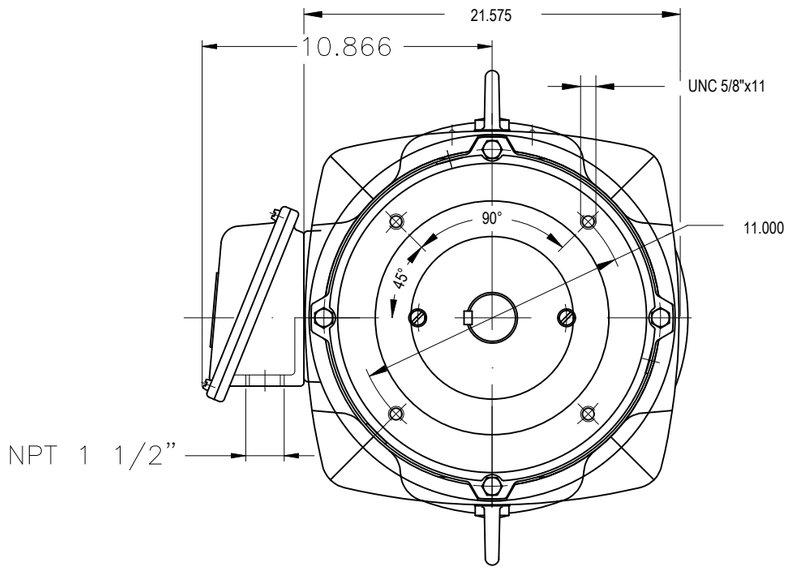

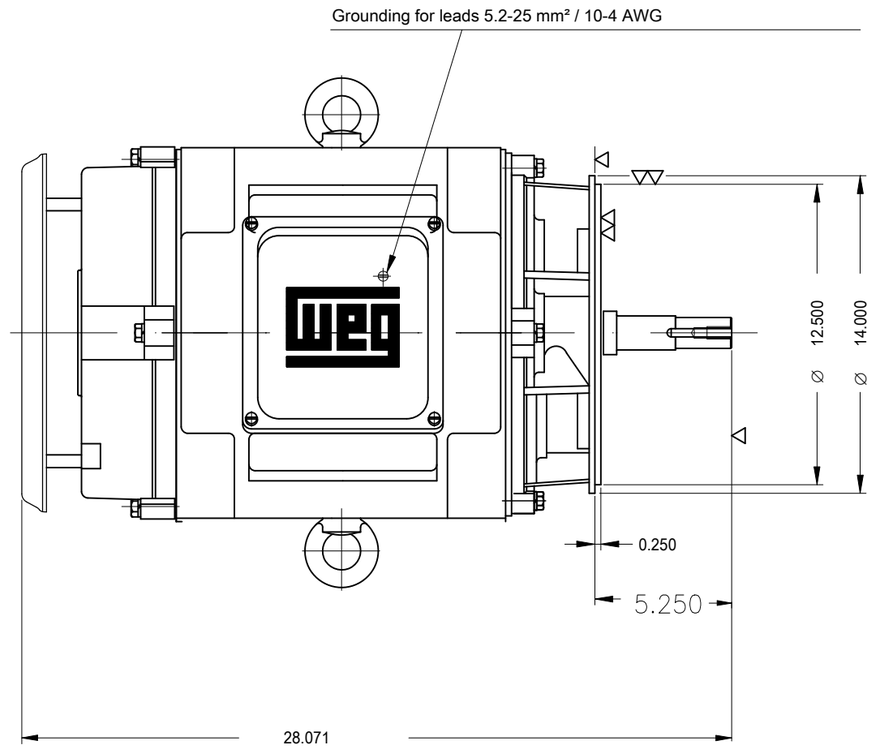

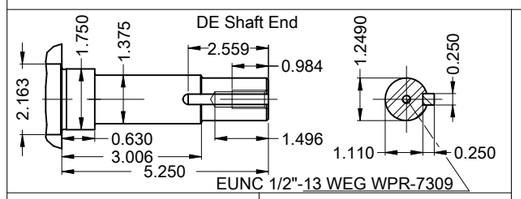

30 HP 04 Poles 60 Hz | A

V.J. PAMENSKY CANADA INC.

ECM	LOC	SUMMARY OF MODIFICATIONS	EXECUTED	CHECKED	RELEASED	DATE	VER
			PIRWBUSER				00

- With drip cover
- Color RAL 5009
- Painting plan 203A
- Mounting NEMA F-1
- Mounting B14R(D)

EXECUTED	PIRWBUSER	THREE PH. MOTOR JM/JP/JET PUMP NEMA PREM. EFF.
CHECKED		FRAME 286JM IP23 ODP
RELEASED		
REL. DATE		WMO Jaragua do Sul Product Engineering

PREVIEW

WDD 00

SHEET 1 / 1

Dimensions in inches

XME A3

WEG's property. Forbidden reproduction without previous authorization.