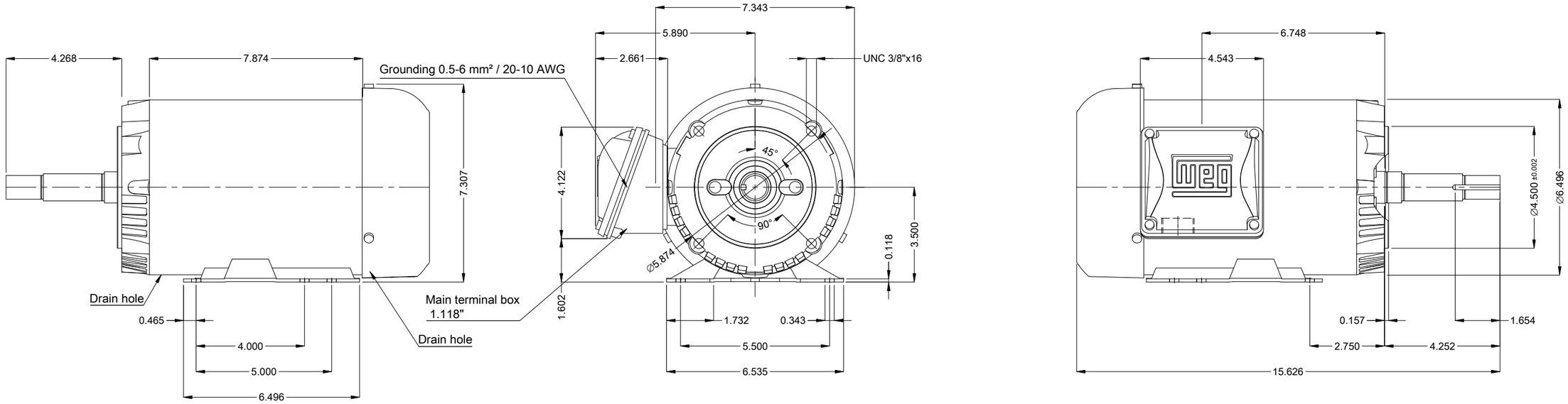

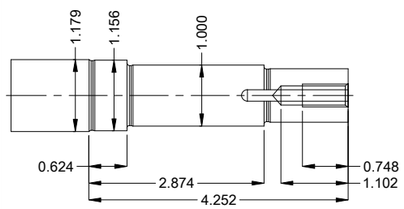

DE Shaft End

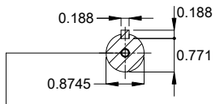

EUNC 3/8"-16 WEG WPR-7309

Fan cover - steel plate
Color Munsell N 1 matte black
Painting plan 207N
Mounting MARKET F-1/B34R(D)
Mounting B34D

1.5 HP 02 Poles 60 Hz | A

V.J. PAMENSKY CANADA INC.

Scale 1 : 4

ECM	LOC	SUMMARY OF MODIFICATIONS	EXECUTED	CHECKED	RELEASED	DATE	VER
			PIRWBUSER				00

EXECUTED	PIRWBUSER
CHECKED	
RELEASED	
REL. DATE	

THREE PH. MOTOR ROLLED STEEL JM NEMA PREM. EFF.
FRAME 143/5JM IP55 TEFC

PREVIEW

WDD 00

SHEET 1 / 1

Dimensions in inches

A3

WEG's property. Forbidden reproduction without previous authorization.