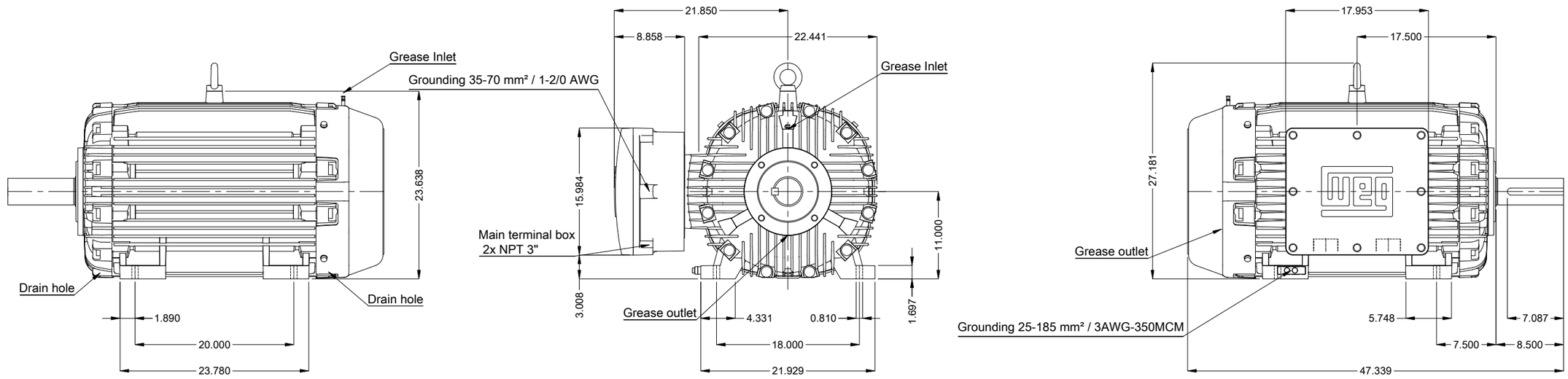

Shaft locking device
NDE sealing - Viton lip seal ring
DE roller bearing
Color RAL 5009
Painting plan 222P
Mounting NEMA F-1
Mounting B3R(D)

DE Shaft End

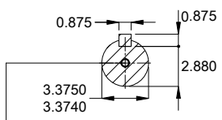

DUNC 3/4"-10 WEG WPR-7339

150 HP 06 Poles 60 Hz | A

V.J. PAMENSKY CANADA INC.

Scale 1 : 14

ECM	LOC	SUMMARY OF MODIFICATIONS	EXECUTED	CHECKED	RELEASED	DATE	VER
			PIRWBUSER				00

EXECUTED	PIRWBUSER
CHECKED	
RELEASED	
REL. DATE	

THREE PH. MOTOR EXPLOSION PROOF NEMA PREM. EFF.
FRAME 447T IP56 TEFC

PREVIEW

WDD 00

SHEET 1 / 1

Dimensions in inches

A3

WEG's property. Forbidden reproduction without previous authorization.