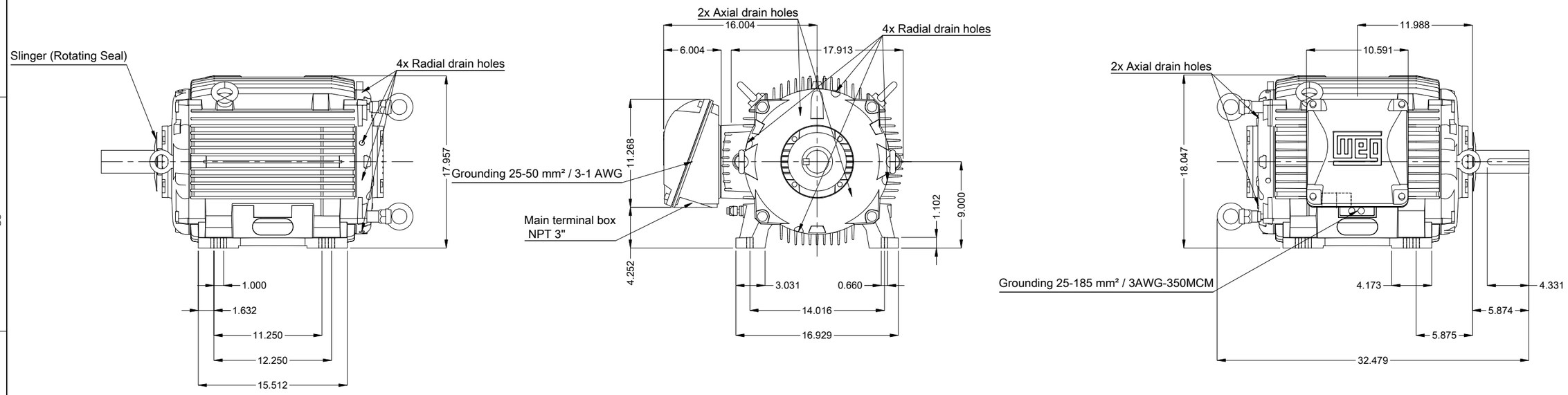

- Without fan cover
- Without fan
- Color RAL 5009
- Painting plan 222E
- Mounting NEMA F-1
- Mounting B3R(D)

DE Shaft End

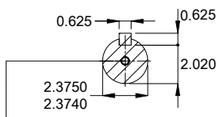

DUNC 3/4"-10 WEG WPR-7339

60 HP 04 Poles 60 Hz | A

V.J. PAMENSKY CANADA INC.

Scale 1 : 11

ECM	LOC	SUMMARY OF MODIFICATIONS	EXECUTED	CHECKED	RELEASED	DATE	VER
			PIRWBUSER				00

EXECUTED	PIRWBUSER
CHECKED	
RELEASED	
REL. DATE	

THREE PH. MOTOR COOLING TOWER W22 NEMA PREM. EFF.
FRAME 364/5T IP55 TEAO

PREVIEW

WDD 00

SHEET 1 / 1

Dimensions in inches

A3

WEG's property. Forbidden reproduction without previous authorization.