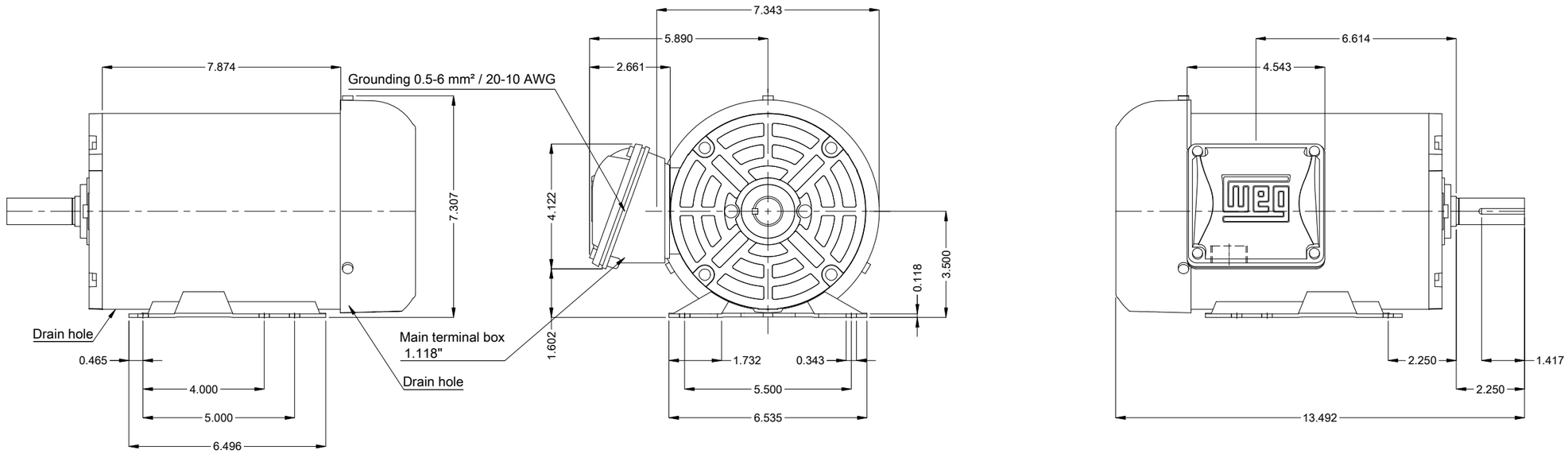

Internal AEGIS ground ring on the DE
Reinforce the foot with 2 mig welding spots
Fan cover - steel plate
Bearing cap
Color Munsell N 1 matte black
Painting plan 207N
Mounting MARKET F-1/B3R(D)
Mounting F-1/B3R(D)

DE Shaft End

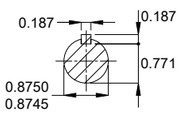

1 HP 06 Poles 60 Hz | A

V.J. PAMENSKY CANADA INC.

Scale 1 : 4

ECM	LOC	SUMMARY OF MODIFICATIONS	EXECUTED	CHECKED	RELEASED	DATE	VER
			PIRWBUSER				00

EXECUTED	PIRWBUSER
CHECKED	
RELEASED	
REL. DATE	

THREE PH. MOTOR ROLLED STEEL NEMA PREM. EFF.
FRAME 143/5T IP55 TEFC

PREVIEW
WDD 00
SHEET 1 / 1

Dimensions in inches

A3

WEG's property. Forbidden reproduction without previous authorization.