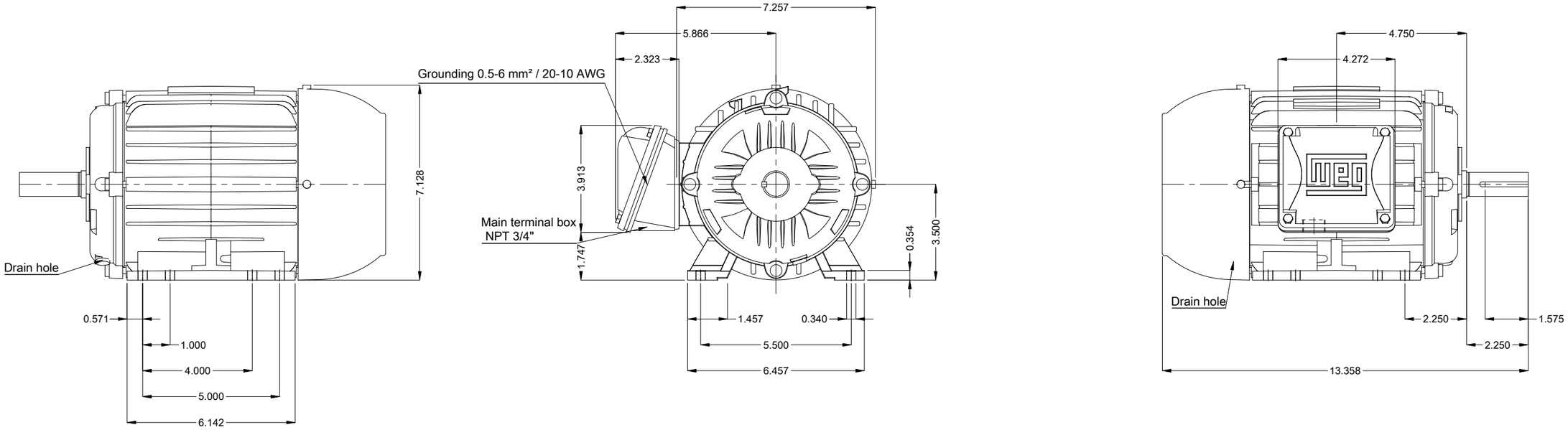

DE Shaft End

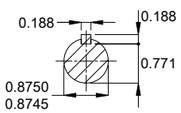

Color RAL 6002

Painting plan 207A

Mounting NEMA F-1

Mounting B3R(D)

1 HP 04 Poles 60 Hz | A

V.J. PAMENSKY CANADA INC.

Scale 1 : 4

ECM	LOC	SUMMARY OF MODIFICATIONS	EXECUTED	CHECKED	RELEASED	DATE	VER
			PIRWBUSER				00

EXECUTED	PIRWBUSER
CHECKED	
RELEASED	
REL. DATE	

THREE PH. MOTOR W22 SUPER PREM. EFF.
FRAME 143/5T IP55 TEFC

PREVIEW

WDD 00

SHEET 1 / 1

Dimensions in inches

A3

WEG's property. Forbidden reproduction without previous authorization.