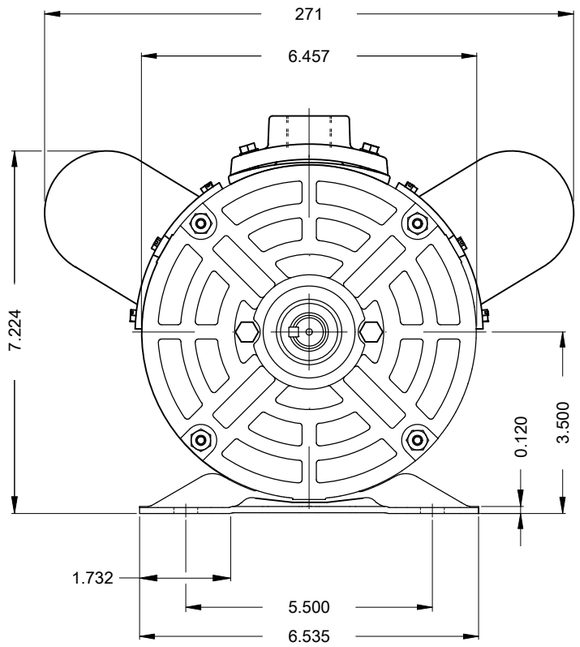

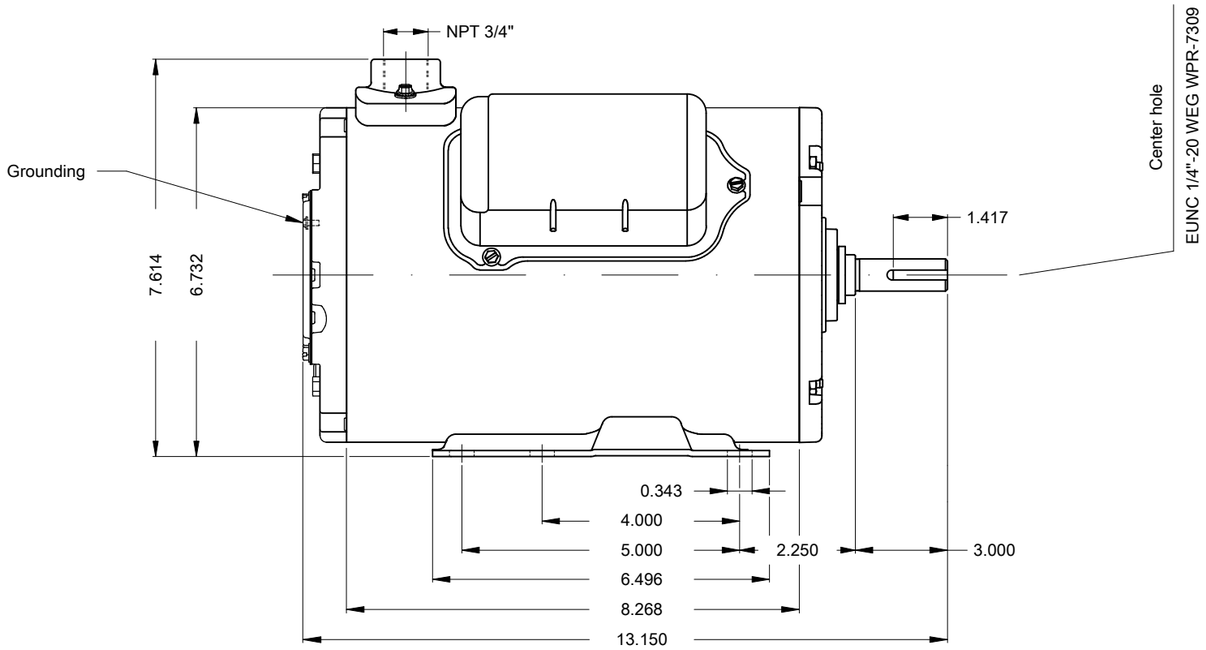

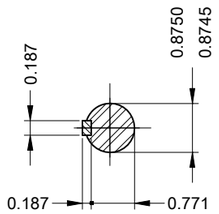

DE Shaft End

Mounting MARKET F-3/B3T

Mounting B3T

ECM	LOC	SUMMARY OF MODIFICATIONS	EXECUTED	CHECKED	RELEASED	DATE	VER
			ALVAREZZ				00

EXECUTED	ALVAREZZ	SINGLE PH. MOTOR ROLLED STEEL GRAIN DRYER	PREVIEW
CHECKED		FRAME 143/5TZ IP55 TEAO	WDD 00
RELEASED			
REL. DATE		WEG HUEHUETOCA [Ingenieria Motores Comerciales]	SHEET 1 / 1

1.5-3.0 HP 02 Poles 60 Hz

A

Dimensions in inches

XME A3

WEG's property. Forbidden reproduction without previous authorization.