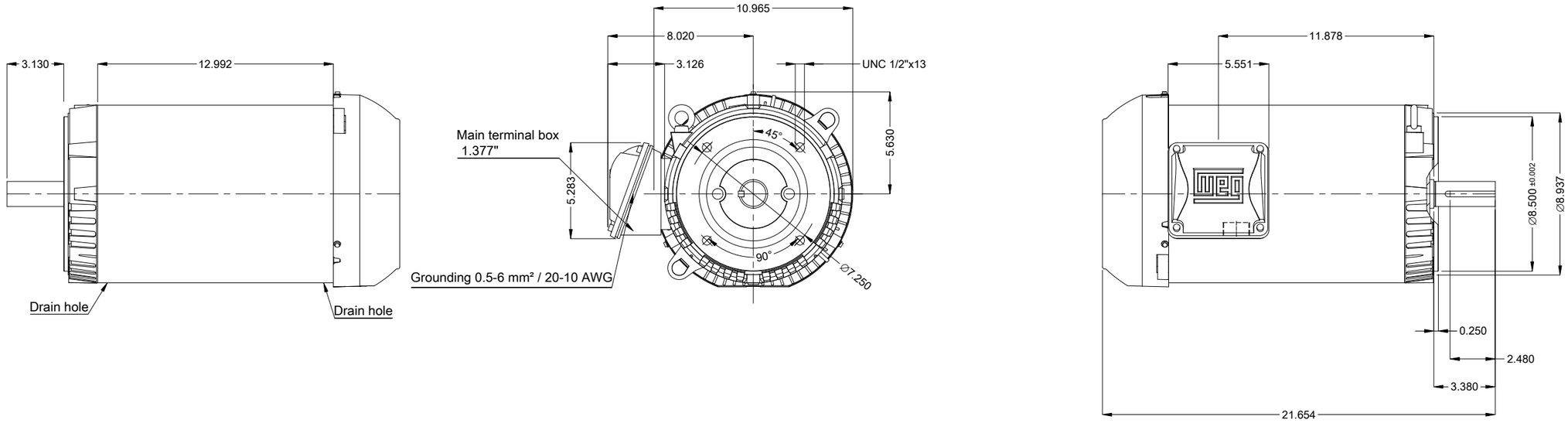

DE Shaft End

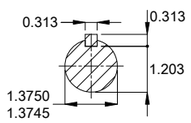

Design A
Color Munsell N 1 matte black
Painting plan 207N
Mounting MARKET F-1/B14R(D)
Mounting F-1/B14R(D)

15 HP 02 Poles 60 Hz | A

V.J. PAMENSKY CANADA INC.

Scale 2 : 13

ECM	LOC	SUMMARY OF MODIFICATIONS	EXECUTED	CHECKED	RELEASED	DATE	VER
			PIRWBUSER				00

EXECUTED	PIRWBUSER	THREE PH. MOTOR ROLLED STEEL NEMA PREM. EFF.
CHECKED		FRAME 213/5TC IP55 TEFC
RELEASED		
REL. DATE		

PREVIEW

WDD 00

SHEET 1 / 1

Dimensions in inches

A3

WEG's property. Forbidden reproduction without previous authorization.