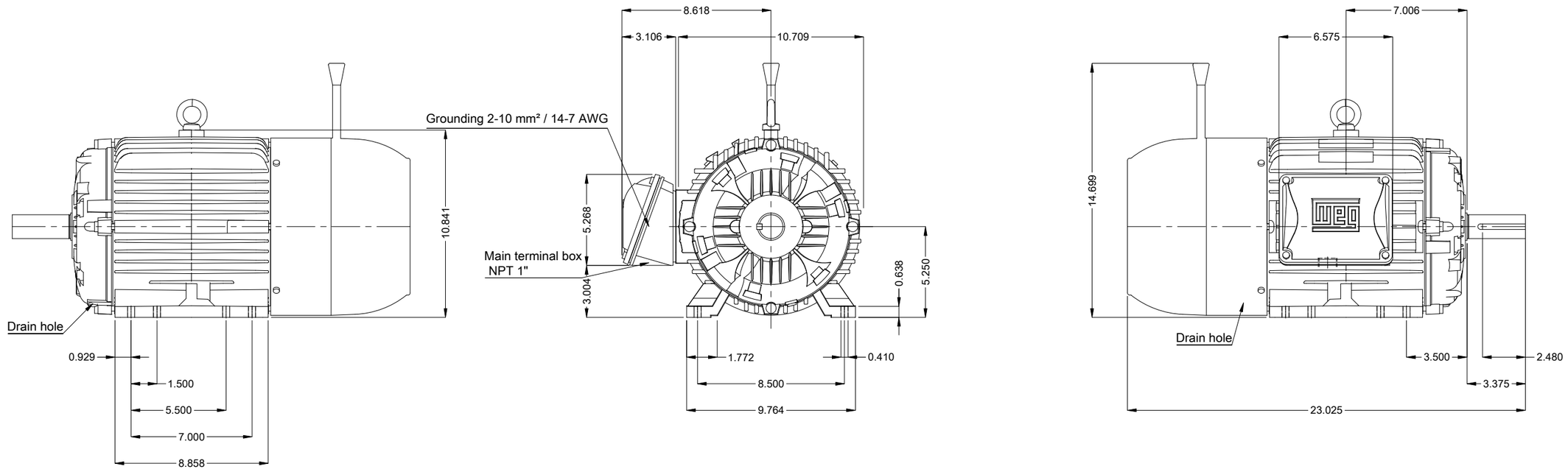

Break size 16 (80 Nm)
Brake voltage 440-480 V
Color RAL 5009
Painting plan 207A
Mounting NEMA F-1
Mounting B3R(D)

DE Shaft End

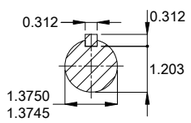

7.5 HP 04 Poles 60 Hz | A

V.J. PAMENSKY CANADA INC.

Scale 2 : 13

ECM	LOC	SUMMARY OF MODIFICATIONS	EXECUTED	CHECKED	RELEASED	DATE	VER
			PIRWBUSER				00

EXECUTED	PIRWBUSER
CHECKED	
RELEASED	
REL. DATE	

THREE PH. MOTOR W22 BRAKE MOTOR NEMA PREM. EFF.
FRAME 213/5T IP55 TEFC

PREVIEW

WDD 00

SHEET 1 / 1

Dimensions in inches

A3

WEG's property. Forbidden reproduction without previous authorization.