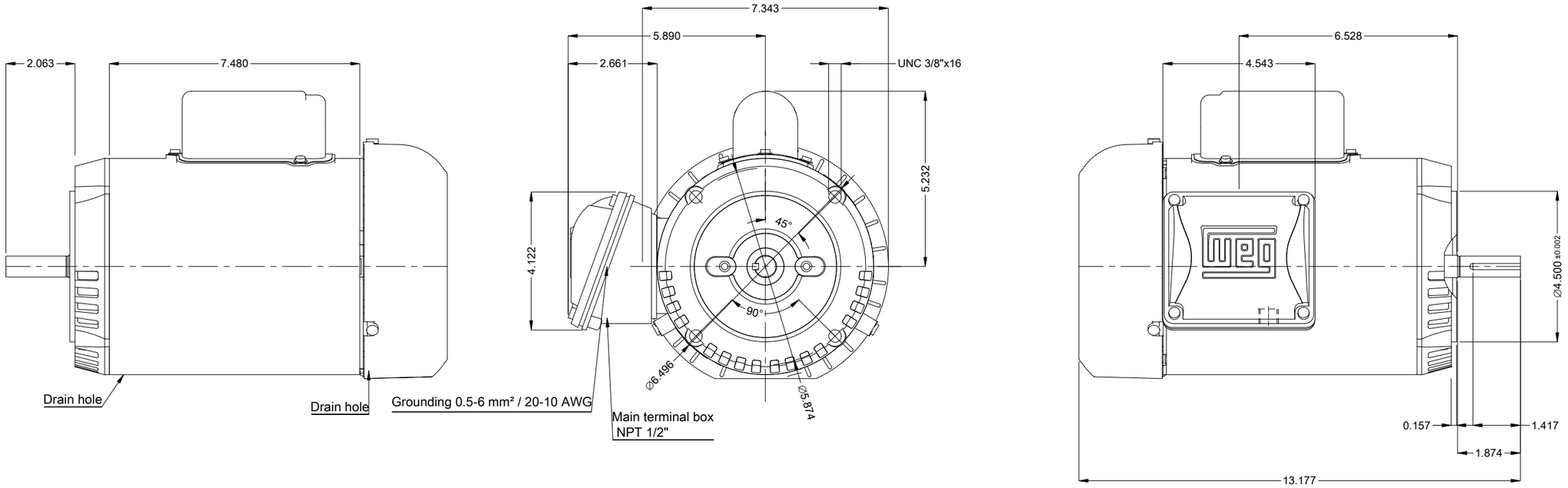

DE Shaft End

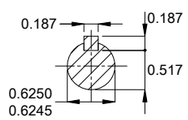

Fan cover - steel plate

Mounting MARKET F-1/B14R(D)

Mounting F-1/B14R(D)

0.75 HP 04 Poles 60 Hz

A

Scale 2 : 7

ECM	LOC	SUMMARY OF MODIFICATIONS	EXECUTED	CHECKED	RELEASED	DATE	VER
			HYBRISUSER				00

EXECUTED	HYBRISUSER	SINGLE PH. MOTOR ROLLED STEEL FARM DUTY
CHECKED		FRAME 56C IP55 TEFC
RELEASED		
REL. DATE		

PREVIEW

WDD 00

SHEET 1 / 1

Dimensions in inches

A3

WEG's property. Forbidden reproduction without previous authorization.