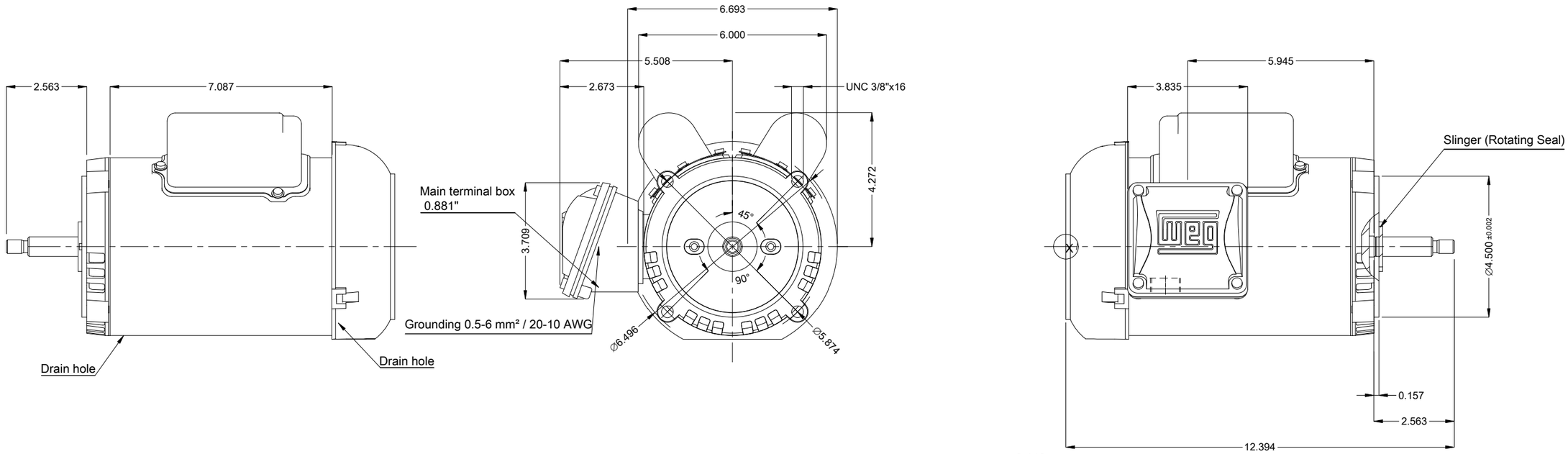

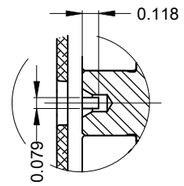

Detail X

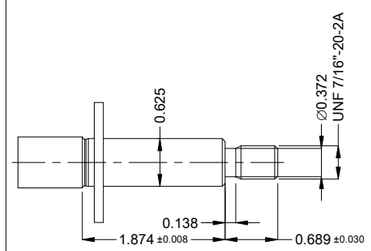

- Dipping impregnation - polyester
- Counterclockwise rotation
- Shaft material - stainless steel AISI 304
- Phenolic thermal protector - automatic
- Without alarm thermal protection
- Without switch off thermal protection
- Color Munsell N 1 matte black
- Painting plan 207N
- Mounting MARKET F-1/B14R(D)
- Mounting F-1/B14R(D)

0.5 HP 04 Poles 60 Hz | A

Scale 2 : 7

ECM	LOC	SUMMARY OF MODIFICATIONS	EXECUTED	CHECKED	RELEASED	DATE	VER
			HYBRISUSER				00

EXECUTED	HYBRISUSER
CHECKED	
RELEASED	
REL. DATE	

SINGLE PH. MOTOR ROLLED STEEL JET PUMP THREADED PREM EFF
FRAME W56J IP55 TEFC

PREVIEW

WDD 00

SHEET 1 / 1

Dimensions in inches

A3

WEG's property. Forbidden reproduction without previous authorization.