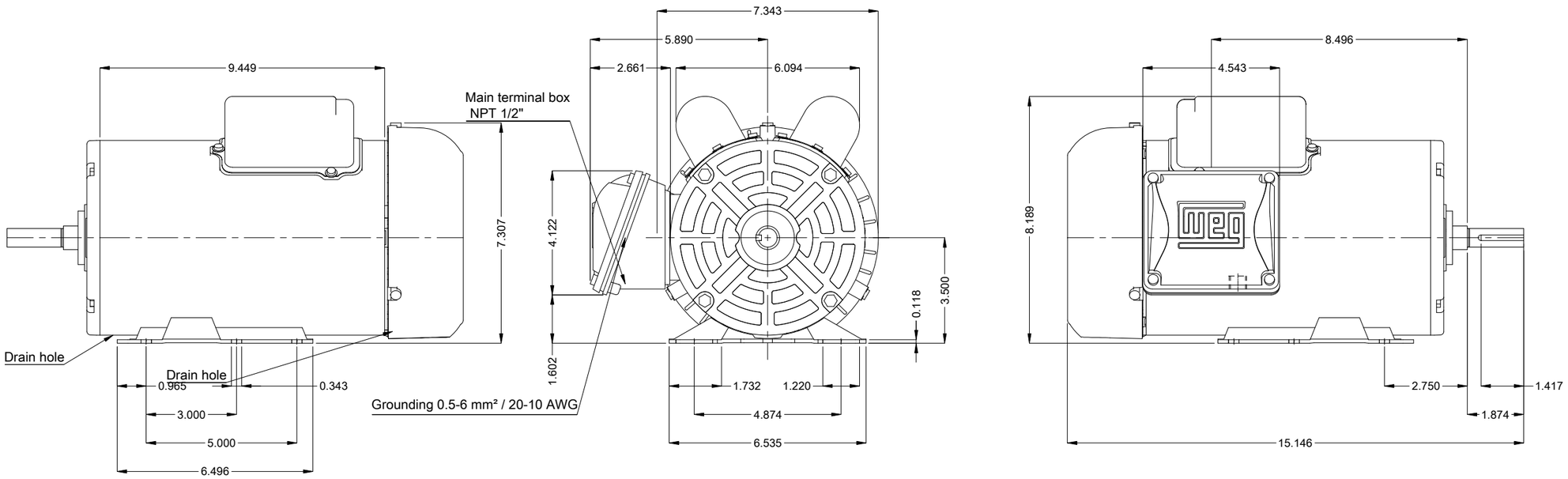

Reinforce the foot with 2 mig welding spots

Fan cover - steel plate

Mounting MARKET F-1/B3R(D)

Mounting F-1/B3R(D)

DE Shaft End

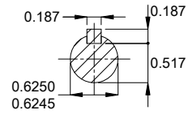

1.5 HP 04 Poles 60 Hz

A

Scale 1 : 4

ECM	LOC	SUMMARY OF MODIFICATIONS	EXECUTED	CHECKED	RELEASED	DATE	VER
			HYBRISUSER				00

EXECUTED	HYBRISUSER
CHECKED	
RELEASED	
REL. DATE	

SINGLE PH. MOTOR ROLLED STEEL FARM DUTY

FRAME 56H IP55 TEFC

PREVIEW

WDD 00

SHEET 1 / 1

Dimensions in inches

A3

WEG's property. Forbidden reproduction without previous authorization.