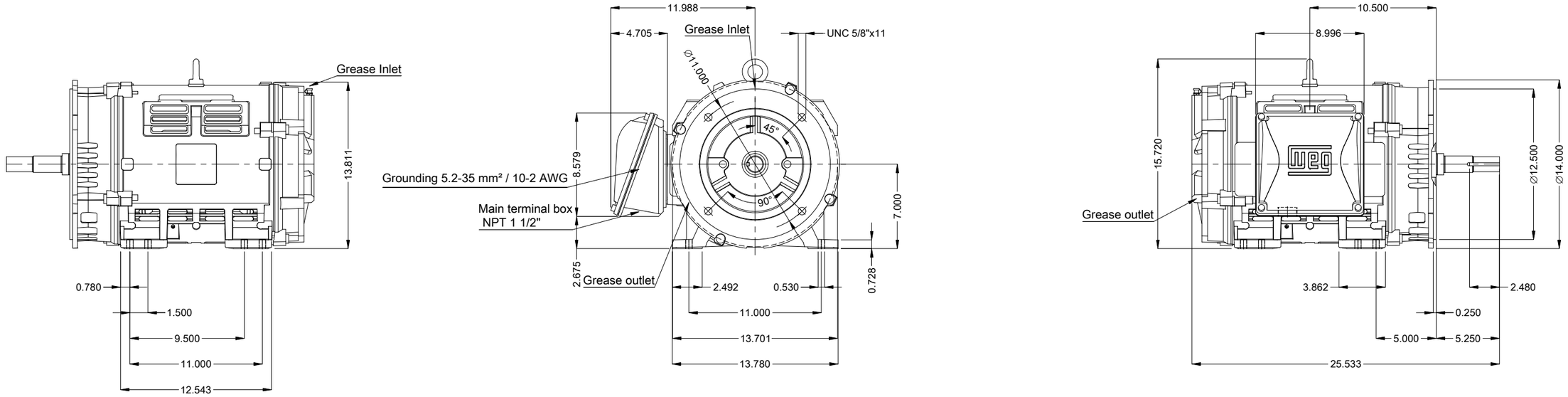

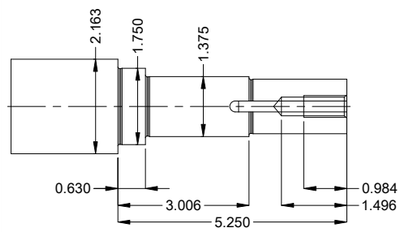

DE Shaft End

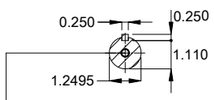

EUNC 1/2"-13 WEG WPR-7309

Color RAL 5009

Painting plan 203A

Mounting NEMA F-1

Mounting B34D

40 HP 02 Poles 60 Hz | A

Scale 1 : 9

ECM	LOC	SUMMARY OF MODIFICATIONS	EXECUTED	CHECKED	RELEASED	DATE	VER
			DATAVIEWERUSER				00

EXECUTED	DATAVIEWERUSER
CHECKED	
RELEASED	
REL. DATE	

THREE PH. MOTOR W40 PUMP JM HIGH EFF.
FRAME 284/6JM IP23 ODP

PREVIEW

WDD 00

SHEET 1 / 1

Dimensions in inches

A3

WEG's property. Forbidden reproduction without previous authorization.