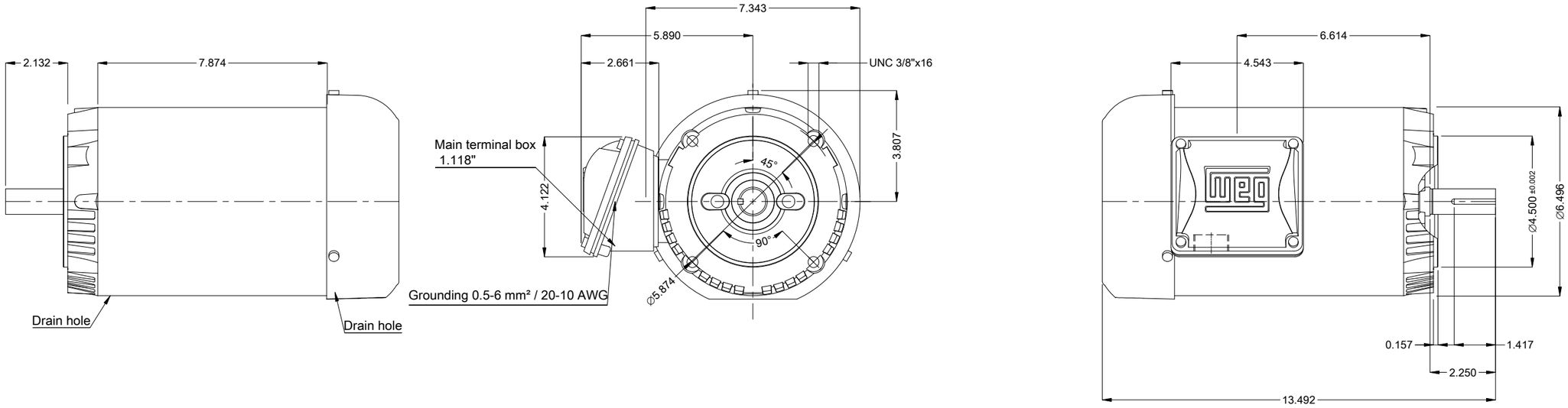

Fan cover - steel plate
Color Munsell N 1 matte black
Painting plan 207N
Mounting MARKET F-1/B14R(D)
Mounting F-1/B14R(D)

DE Shaft End

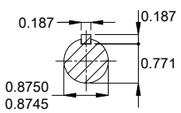

1 HP 04 Poles 60 Hz | A

Scale 1 : 4

ECM	LOC	SUMMARY OF MODIFICATIONS	EXECUTED	CHECKED	RELEASED	DATE	VER
			HYBRISUSER				00

EXECUTED	HYBRISUSER	THREE PH. MOTOR ROLLED STEEL NEMA PREM. EFF.
CHECKED		FRAME 143/5TC IP55 TEFC
RELEASED		
REL. DATE		

PREVIEW

WDD 00

SHEET 1 / 1

Dimensions in inches

A3

WEG's property. Forbidden reproduction without previous authorization.