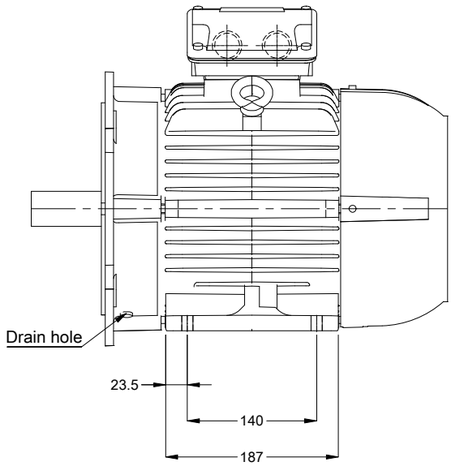

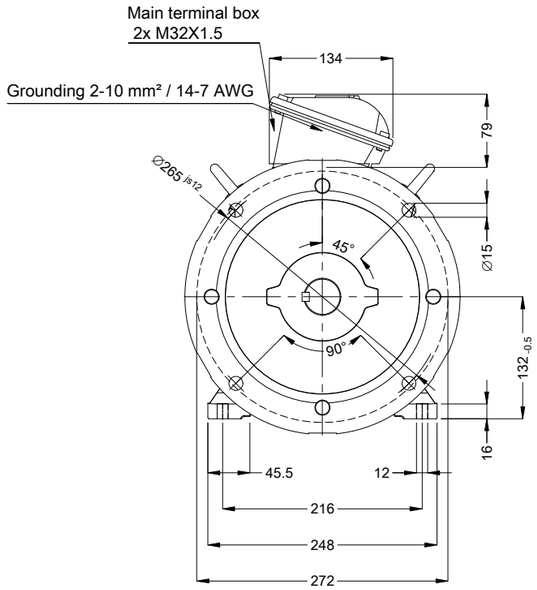

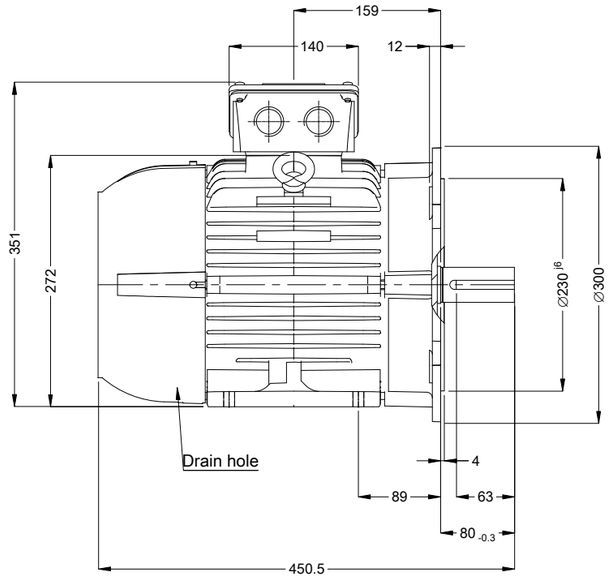

Color RAL 5009

Painting plan 207A

Mounting B35T

DE Shaft End

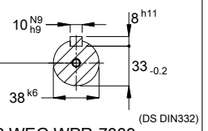

DM12 WEG WPR-7339

10 HP 02 Poles 60 Hz

A

Scale 2 : 13

ECM	LOC	SUMMARY OF MODIFICATIONS	EXECUTED	CHECKED	RELEASED	DATE	VER
			HYBRISUSER				00

EXECUTED	HYBRISUSER
CHECKED	
RELEASED	
REL. DATE	

THREE PH. MOTOR W22 IE3

FRAME 132S IP55 TEFC

PREVIEW

WDD 00

SHEET 1 / 1

Dimensions in mm

A3

WEG's property. Forbidden reproduction without previous authorization.