ATENÇÃO/ATTENTION
MOTOR DEVE SER LIGADO APENAS NA POSIÇÃO VERTICAL
MOTOR MUST BE ENERGIZED ONLY IN THE VERTICAL POSITION

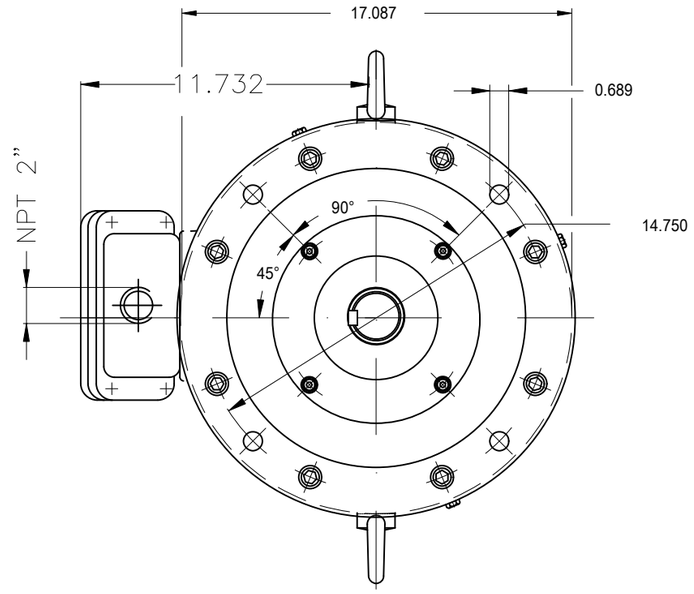

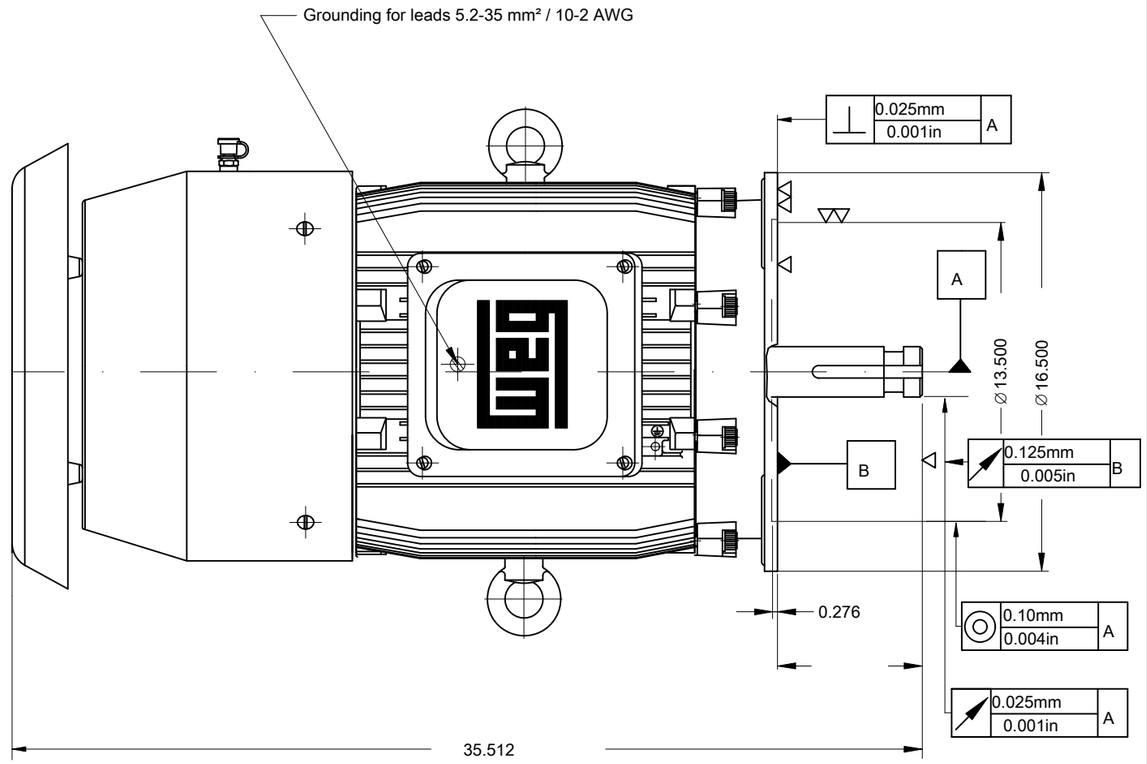

- Reduced balancing with half key
- Packing - crate
- Plastic flat plug
- Shaft material - SAE/ABNT 1040/45
- B key
- With drip cover
- Fan cover - steel plate
- NDE sealing - lip seal
- Sealing - oil seal ring
- Without epoxi in the cables outlet
- Grease - Mobil Polyrex EM
- Bearing cap
- Without terminal block
- Without overload protector at bearing
- Without Space Heaters
- Without thermal protection on bearings
- Without alarm thermal protection
- Without switch off thermal protection
- Rubber drain plug
- With grease fitting
- Aluminum fan
- Color RAL 5009
- Painting plan 203A
- Mounting NEMA W-6
- Mounting V1

DE Shaft End

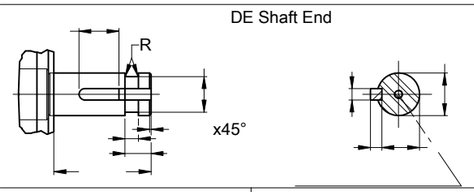

40 HP 04 Poles 60 Hz | A

ECM	LOC	SUMMARY OF MODIFICATIONS	EXECUTED	CHECKED	RELEASED	DATE	VER
			HYBRISUSER				00

EXECUTED	HYBRISUSER	THREE PH. MOTOR IN LINE EXTRA THRUST NEMA PREM. EFF.	PREVIEW
CHECKED		FRAME 324LP IP55 TEFC	WDD 00
RELEASED			
REL. DATE		WMO Jaragua do Sul Product Engineering	SHEET 1 / 1

Dimensions in inches

XME A3

WEG's property. Forbidden reproduction without previous authorization.