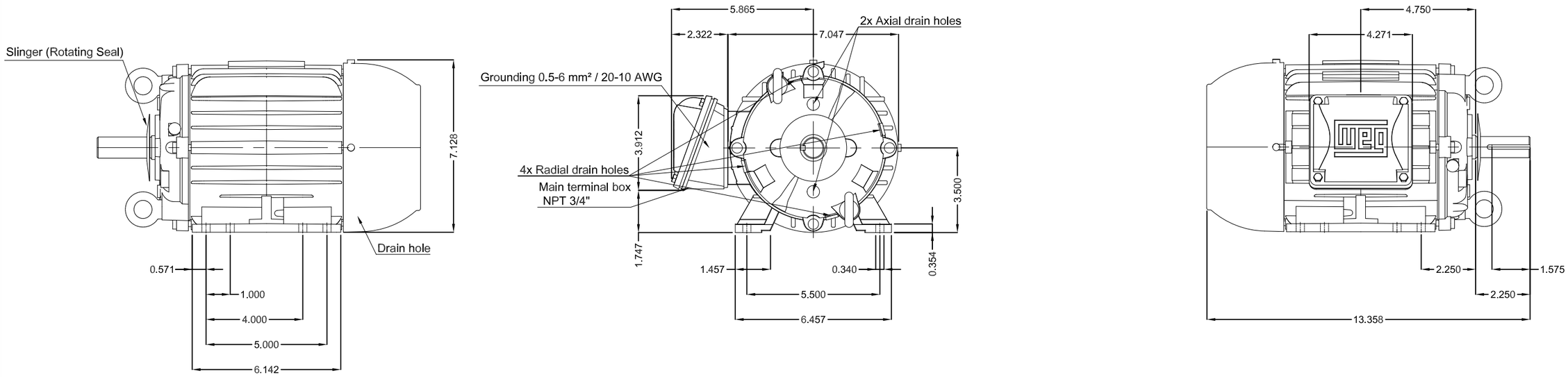


DE Shaft End

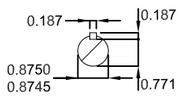


Color RAL 5009

Painting plan 202E

Mounting NEMA F-1

Mounting B3R(D)

2 HP 04 Poles 60 Hz | A

| ECM | LOC | SUMMARY OF MODIFICATIONS | EXECUTED | CHECKED | RELEASED | DATE | VER |
|---|---|---|---|---|---|---|---|
| | | | HYBRISUSER | | | | 00 |

| | |
|---|---|
| EXECUTED | HYBRISUSER |
| CHECKED | |
| RELEASED | |
| REL. DATE | |

THREE PH. MOTOR COOLING TOWER W22 NEMA PREM. EFF
FRAME 143/5T IP55 TEFC

PREVIEW

WDD 00

SHEET /

Dimensions in inches

A3

WEG's property. Forbidden reproduction without previous authorization.