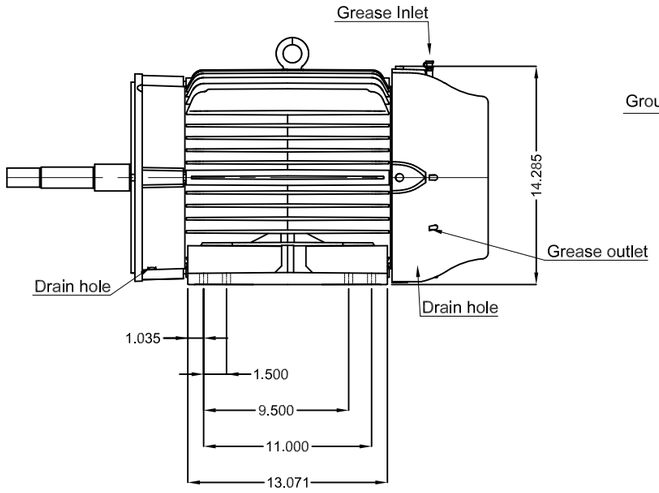

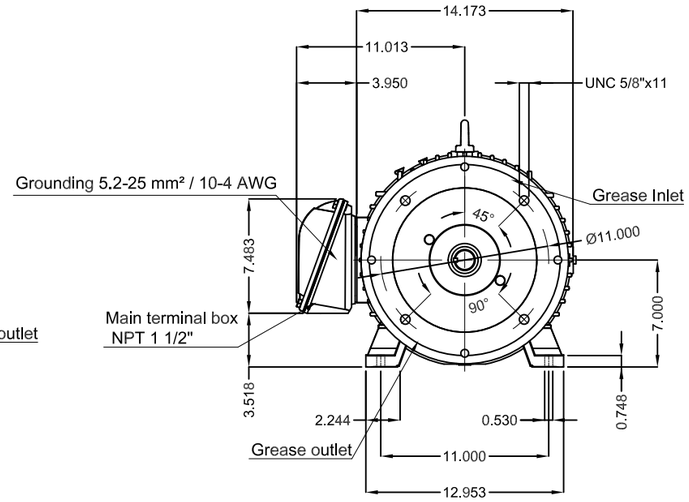

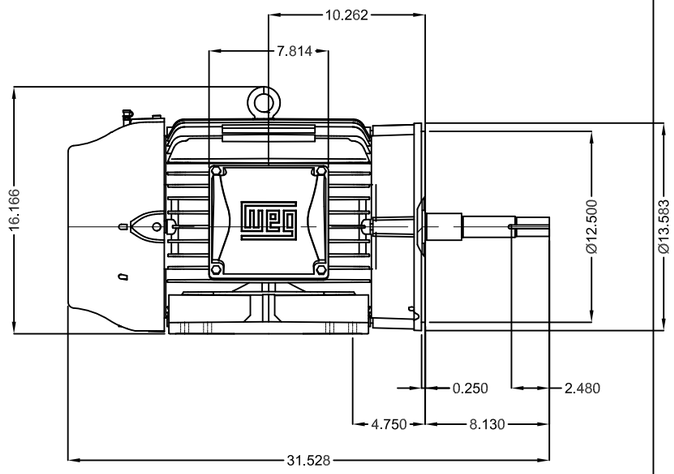

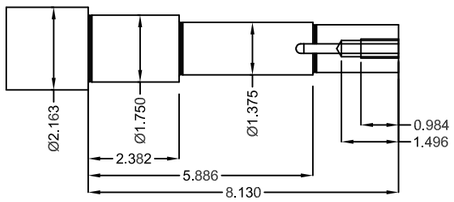

DE Shaft End

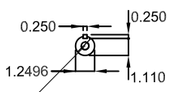

EUNC 1/2"-13 WEG WPR-7309

Color RAL 5009

Painting plan 203A

Mounting NEMA F-1

Mounting B34R(D)

20 HP 06 Poles 60 Hz | A

ECM	LOC	SUMMARY OF MODIFICATIONS	EXECUTED	CHECKED	RELEASED	DATE	VER
			HYBRISUSER				00

EXECUTED	HYBRISUSER
CHECKED	
RELEASED	
REL. DATE	

THREE PH. MOTOR JM/JP/JET PUMP W22 NEMA PREM. EFF.
FRAME 284/6JP IP55 TEFC

PREVIEW

WDD 00

SHEET /

Dimensions in inches

A3

WEG's property. Forbidden reproduction without previous authorization.