ATENÇÃO/ATTENTION
MOTOR DEVE SER LIGADO APENAS NA POSIÇÃO VERTICAL
MOTOR MUST BE ENERGIZED ONLY IN THE VERTICAL POSITION

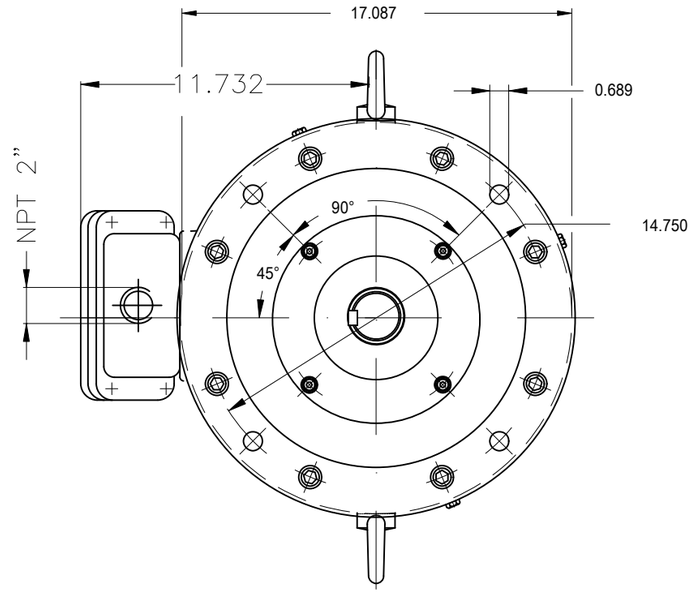

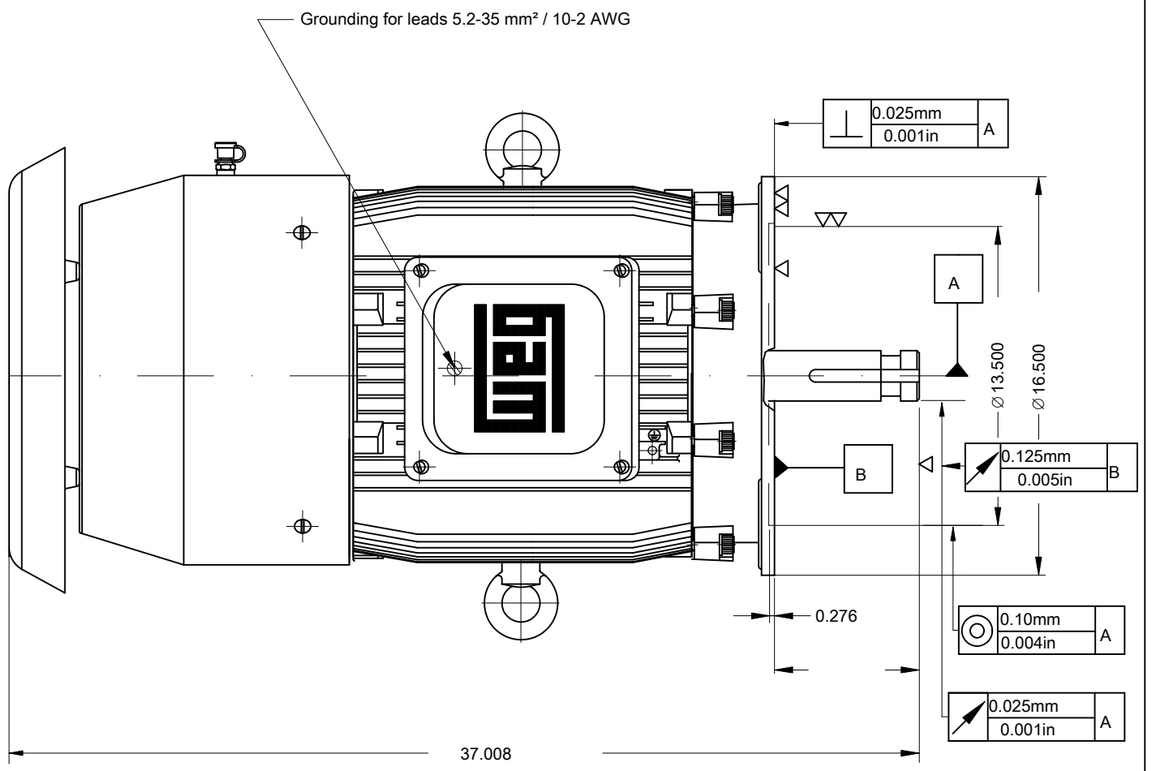

Packing - crate
Plastic flat plug
Shaft material - SAE/ABNT 1040/45
B key
With drip cover
Fan cover - steel plate
NDE sealing - lip seal
Sealing - oil seal ring
Without epoxi in the cables outlet
Grease - Mobil Polyrex EM
Bearing cap
C3 DE bearing
Without terminal block
Without overload protector at bearing
Without Space Heaters
Without thermal protection on bearings
Without alarm thermal protection
Without switch off thermal protection
Rubber drain plug
With grease fitting
Aluminum fan
Color RAL 5009
Painting plan 203A
Mounting NEMA W-6
Mounting V1

DE Shaft End

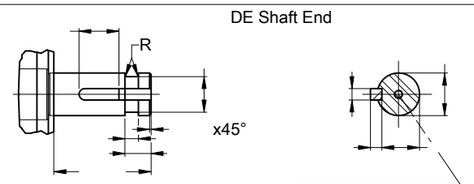

25 HP 08 Poles 60 Hz | A

ECM	LOC	SUMMARY OF MODIFICATIONS	EXECUTED	CHECKED	RELEASED	DATE	VER
			HYBRISUSER				00

EXECUTED	HYBRISUSER	THREE PH. MOTOR IN LINE EXTRA THRUST NEMA PREM. EFF.	PREVIEW
CHECKED		FRAME 326LP IP55 TEFC	WDD 00
RELEASED			
REL. DATE		WMO Jaragua do Sul Product Engineering	SHEET 1 / 1

Dimensions in inches
XME A3

WEG's property. Forbidden reproduction without previous authorization.