1	2	3	4	5	6

ATENÇÃO/ATTENTION
MOTOR DEVE SER LIGADO APENAS NA POSIÇÃO VERTICAL
MOTOR MUST BE ENERGIZED ONLY IN THE VERTICAL POSITION

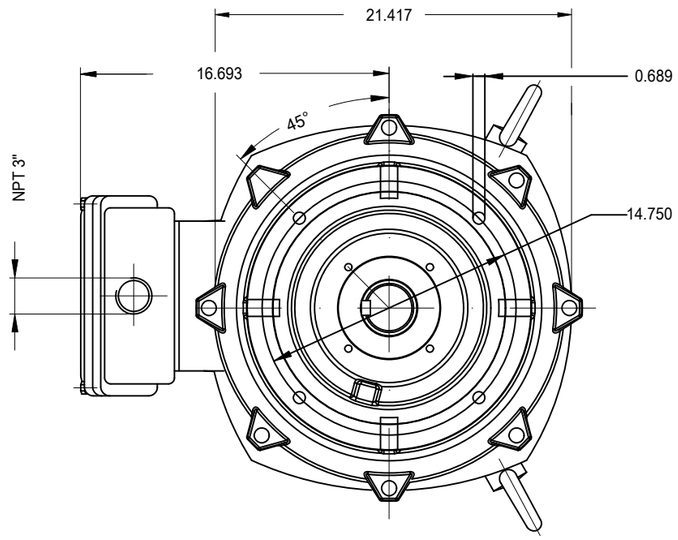

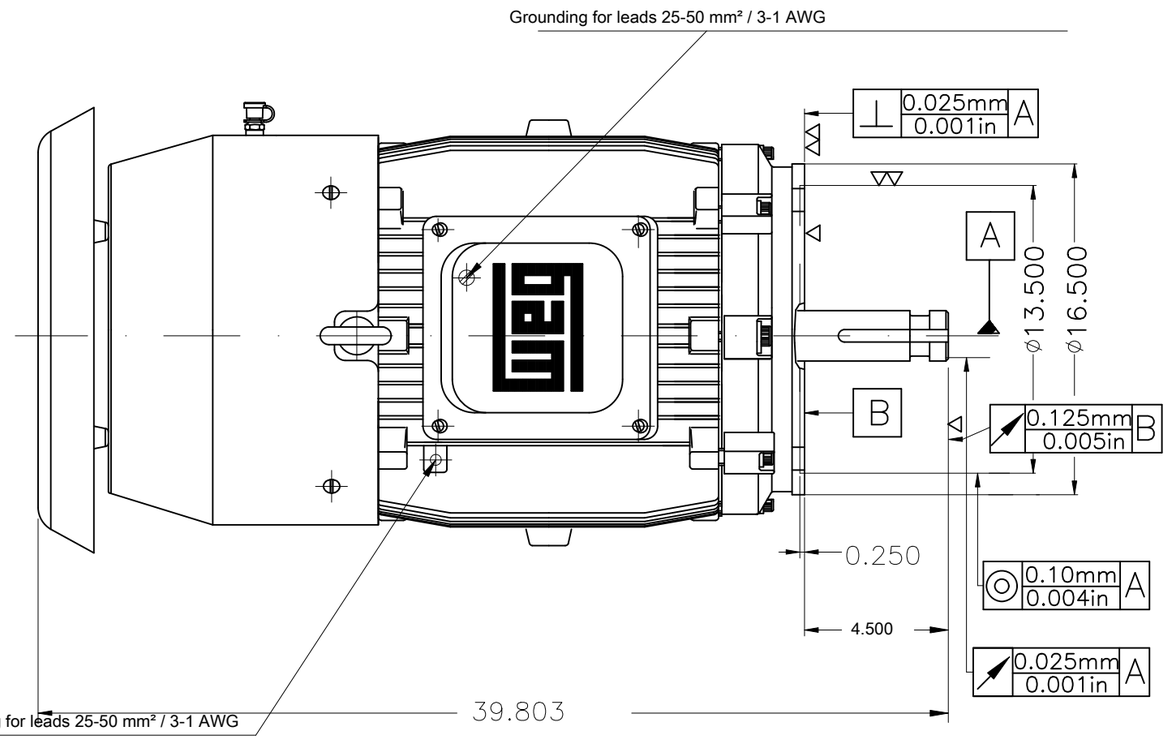

- Packing - crate
- Plastic flat plug
- Shaft material - SAE/ABNT 1040/45
- B key
- With drip cover
- Fan cover - steel plate
- NDE sealing - lip seal
- Sealing - oil seal ring
- Without epoxi in the cables outlet
- Grease - Mobil Polyrex EM
- Bearing cap
- Without terminal block
- Without overload protector at bearing
- Without Space Heaters
- Without thermal protection on bearings
- Without alarm thermal protection
- Without switch off thermal protection
- Rubber drain plug
- With grease fitting
- Aluminum fan
- Double grounding
- Color RAL 5009
- Painting plan 203A
- Mounting NEMA W-6
- Mounting V1

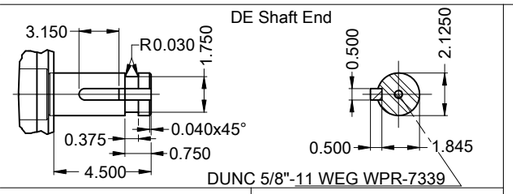

75 HP 04 Poles 60 Hz | A

ECM	LOC	SUMMARY OF MODIFICATIONS	EXECUTED	CHECKED	RELEASED	DATE	VER
			HYBRISUSER				00

EXECUTED	HYBRISUSER	THREE PH. MOTOR IN LINE EXTRA THRUST NEMA PREM. EFF.	PREVIEW
CHECKED		FRAME 364/5LP IP55 TEFC	WDD 00
RELEASED			
REL. DATE		WMO Jaragua do Sul Product Engineering	SHEET 1 / 1

Dimensions in inches
XME A3

WEG's property. Forbidden reproduction without previous authorization.