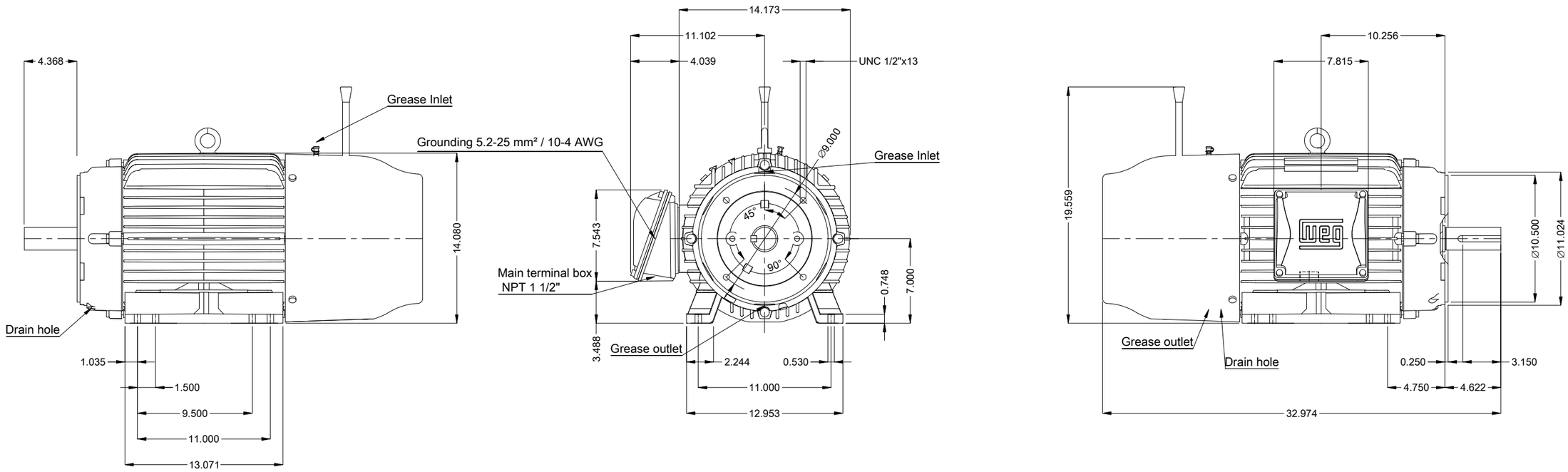


Brake 20 (260 Nm)
Color RAL 5009
Painting plan 203A
Mounting NEMA F-1
Mounting B34D

DE Shaft End

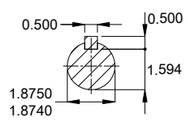


30 HP 04 Poles 60 Hz | A

Scale 1 : 9

| ECM | LOC | SUMMARY OF MODIFICATIONS | EXECUTED | CHECKED | RELEASED | DATE | VER |
|---|---|---|---|---|---|---|---|
| | | | HYBRISUSER | | | | 00 |

| | |
|---|---|
| EXECUTED | HYBRISUSER |
| CHECKED | |
| RELEASED | |
| REL. DATE | |

THREE PH. MOTOR W22 BRAKE MOTOR NEMA PREM. EFF.
FRAME 284/6TC IP55 TEFC

PREVIEW

WDD 00

SHEET 1 / 1

Dimensions in inches

A3

WEG's property. Forbidden reproduction without previous authorization.