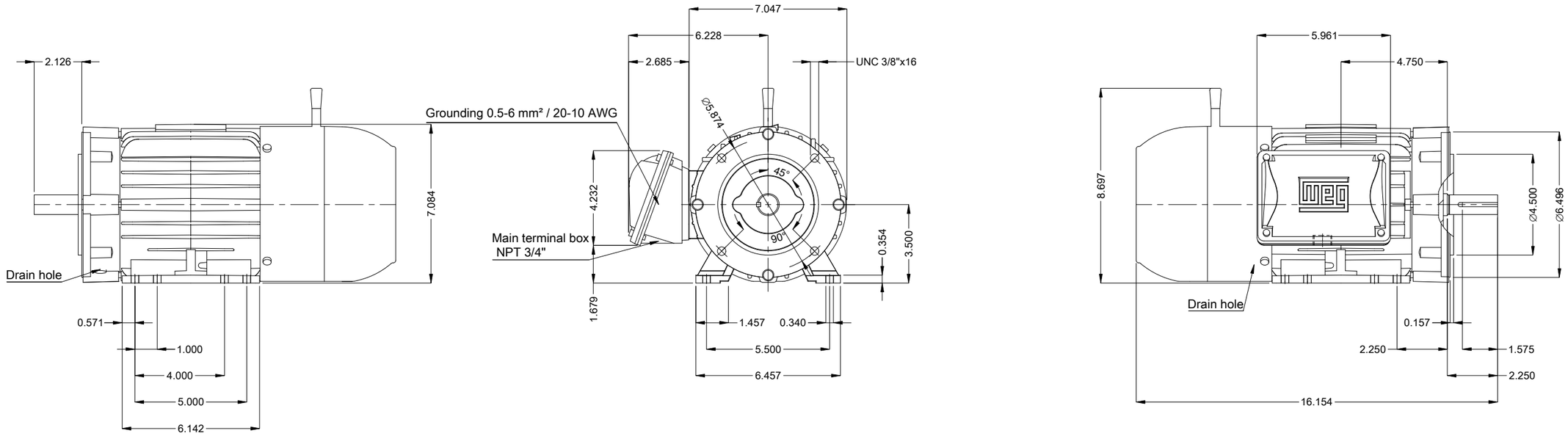


| |
|---|
| With brake 10 (16 Nm) |
| Brake voltage 525-575 V |
| Color RAL 5009 |
| Painting plan 207A |
| Mounting NEMA F-1 |
| Mounting B34D |

DE Shaft End

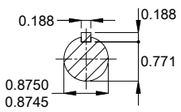


1.5 HP 04 Poles 60 Hz | A

Scale 1 : 5

| ECM | LOC | SUMMARY OF MODIFICATIONS | EXECUTED | CHECKED | RELEASED | DATE | VER |
|---|---|---|---|---|---|---|---|
| | | | HYBRISUSER | | | | 00 |

| | |
|---|---|
| EXECUTED | HYBRISUSER |
| CHECKED | |
| RELEASED | |
| REL. DATE | |

THREE PH. MOTOR W22 BRAKE MOTOR NEMA PREM. EFF.
FRAME 143/5TC IP55 TEFC

PREVIEW

WDD 00

SHEET 1 / 1

Dimensions in inches

A3

WEG's property. Forbidden reproduction without previous authorization.