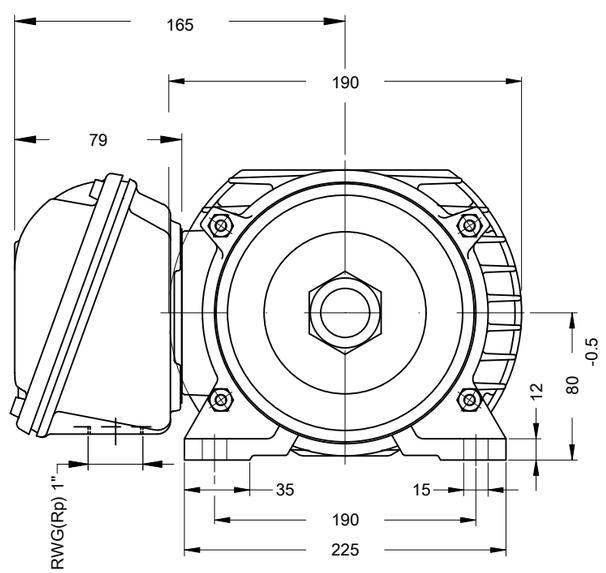

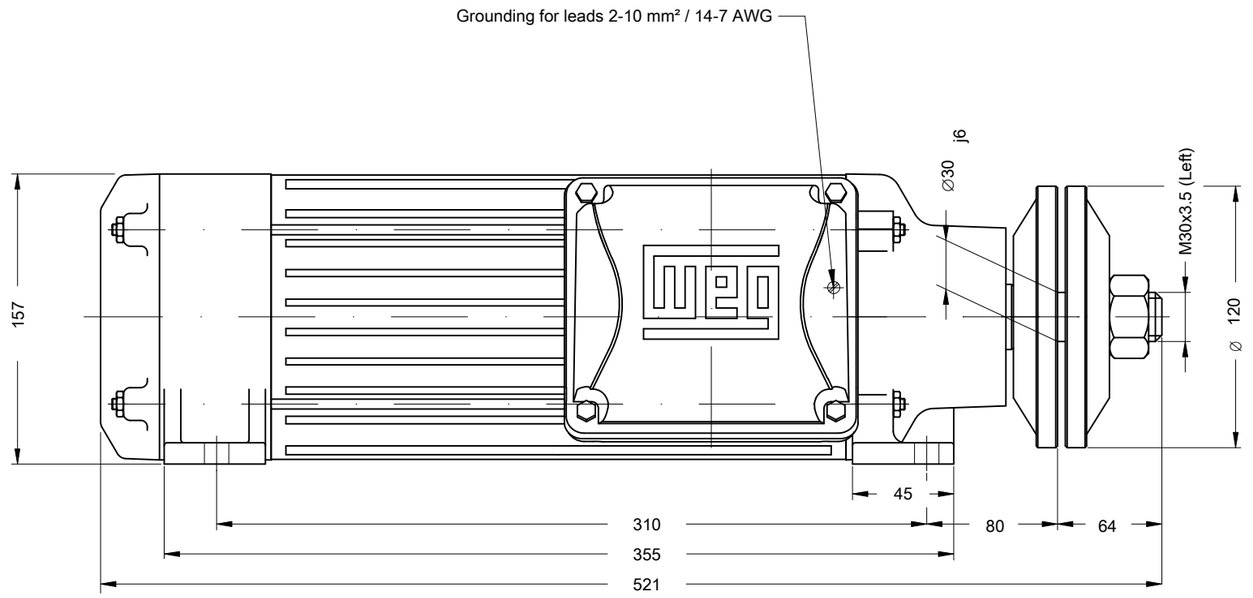

Color RAL 7022

Painting plan 207A

Mounting B3R(D)

5 HP 02 Poles 60 Hz | A

ECM	LOC	SUMMARY OF MODIFICATIONS	EXECUTED	CHECKED	RELEASED	DATE	VER
			HYBRISUSER				00

EXECUTED	HYBRISUSER	THREE PH. MOTOR SAW ARBOR MOTOR	PREVIEW	
CHECKED		FRAME 80M/MS IP54 TEFC	WDD 00	
RELEASED				
REL. DATE		WMO Jaragua do Sul Product Engineering	SHEET 1 / 1	

Dimensions in mm

XME A3

WEG's property. Forbidden reproduction without previous authorization.