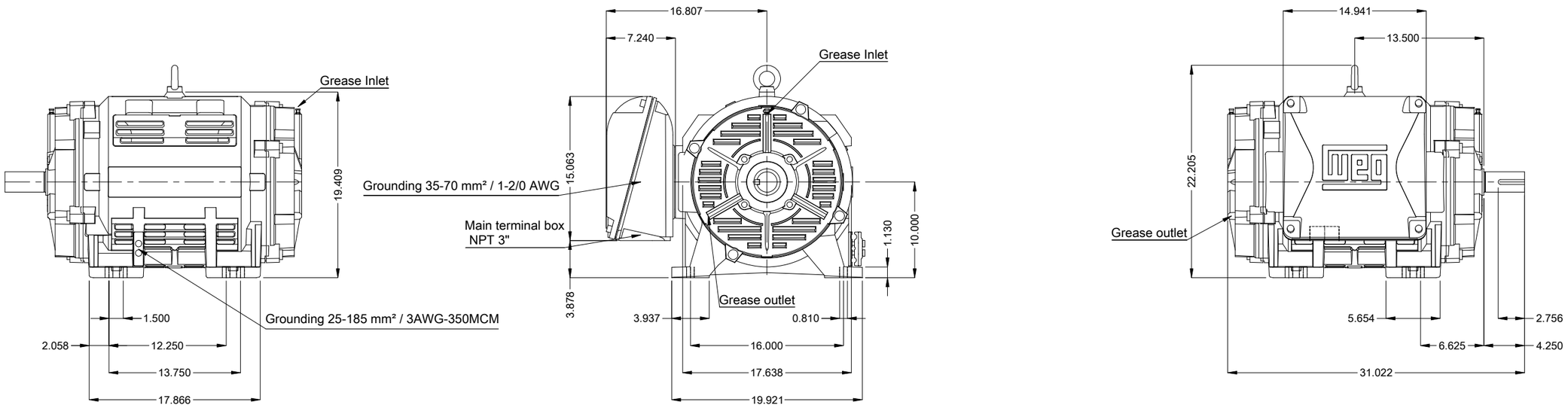

Color RAL 3002

Painting plan 203A

Mounting NEMA F-1

Mounting B3R(D)

DE Shaft End

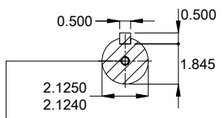

DUNC 3/4"-10 WEG WPR-7339

125 HP 02 Poles 60 Hz | A

Scale 1 : 12

ECM	LOC	SUMMARY OF MODIFICATIONS	EXECUTED	CHECKED	RELEASED	DATE	VER
		DATAVIEWERUSER					00

EXECUTED DATAVIEWERUSER

CHECKED

RELEASED

REL. DATE

THREE PH. MOTOR W40 HIGH EFF.

FRAME 404/5TS IP23 ODP

PREVIEW

WDD 00

SHEET 1 / 1

Dimensions in inches

A3

WEG's property. Forbidden reproduction without previous authorization.