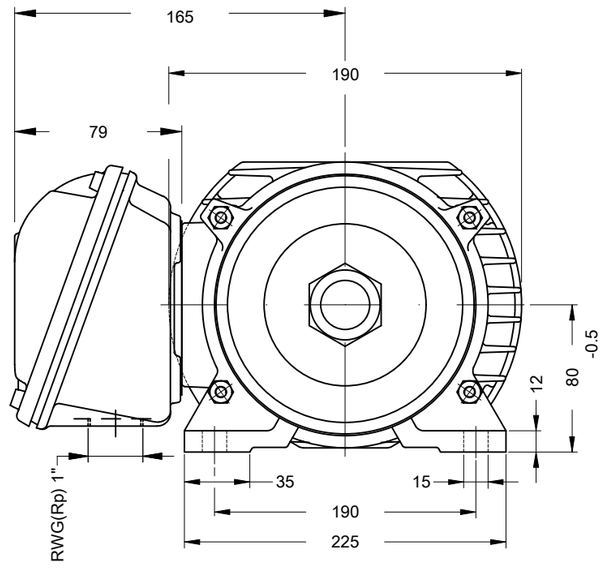

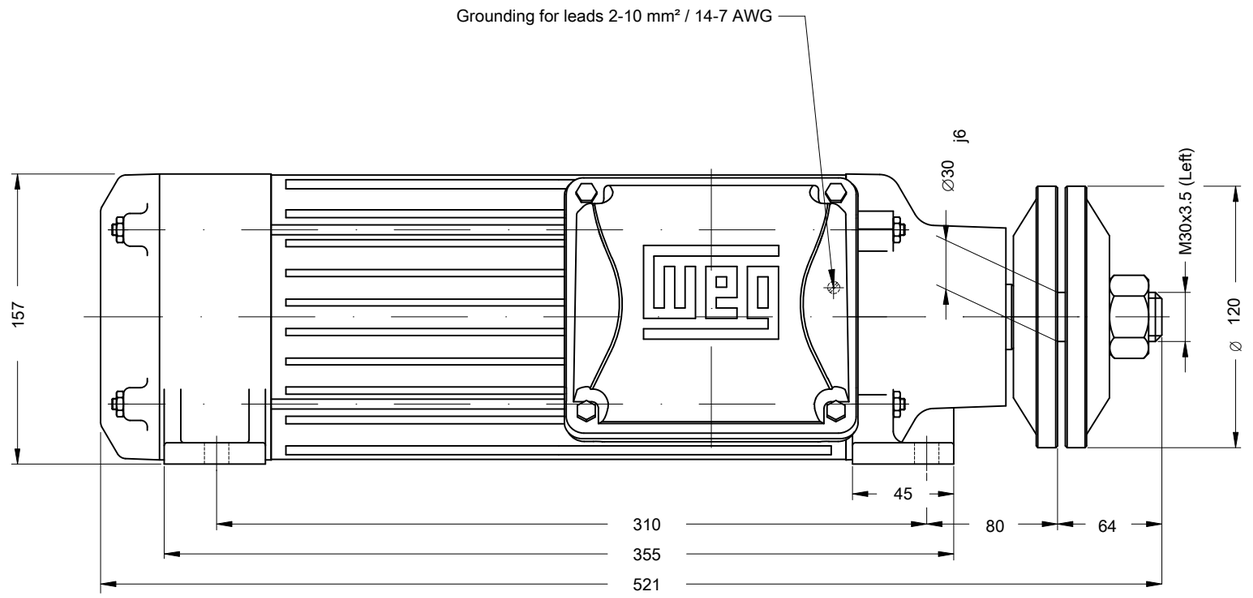

Color RAL 7022

Painting plan 207A

Mounting B3R(D)

5 HP 02 Poles 60 Hz | A

ECM	LOC	SUMMARY OF MODIFICATIONS	EXECUTED	CHECKED	RELEASED	DATE	VER
			HYBRISUSER				00

EXECUTED	HYBRISUSER
CHECKED	
RELEASED	
REL. DATE	

THREE PH. MOTOR SAW ARBOR MOTOR
FRAME 80M/MS IP54 TEFC

WMO Jaragua do Sul Product Engineering

PREVIEW

WDD 00

SHEET 1 / 1

Dimensions in mm

XME A3

WEG's property. Forbidden reproduction without previous authorization.