EIXO/SHAFT	
PADRÃO/STANDARD	
OPCIONAL/OPTIONAL	
ESPECIAL/SPECIAL	X

Dimensões em polegada
Dimensions in inches

CERTIFIED
WEG MOTORES
Certified document.
Not subject to changes.

THIS IS AN UPDATED REVISION, THE PREVIOUS ONE MUST BE DISREGARDED.

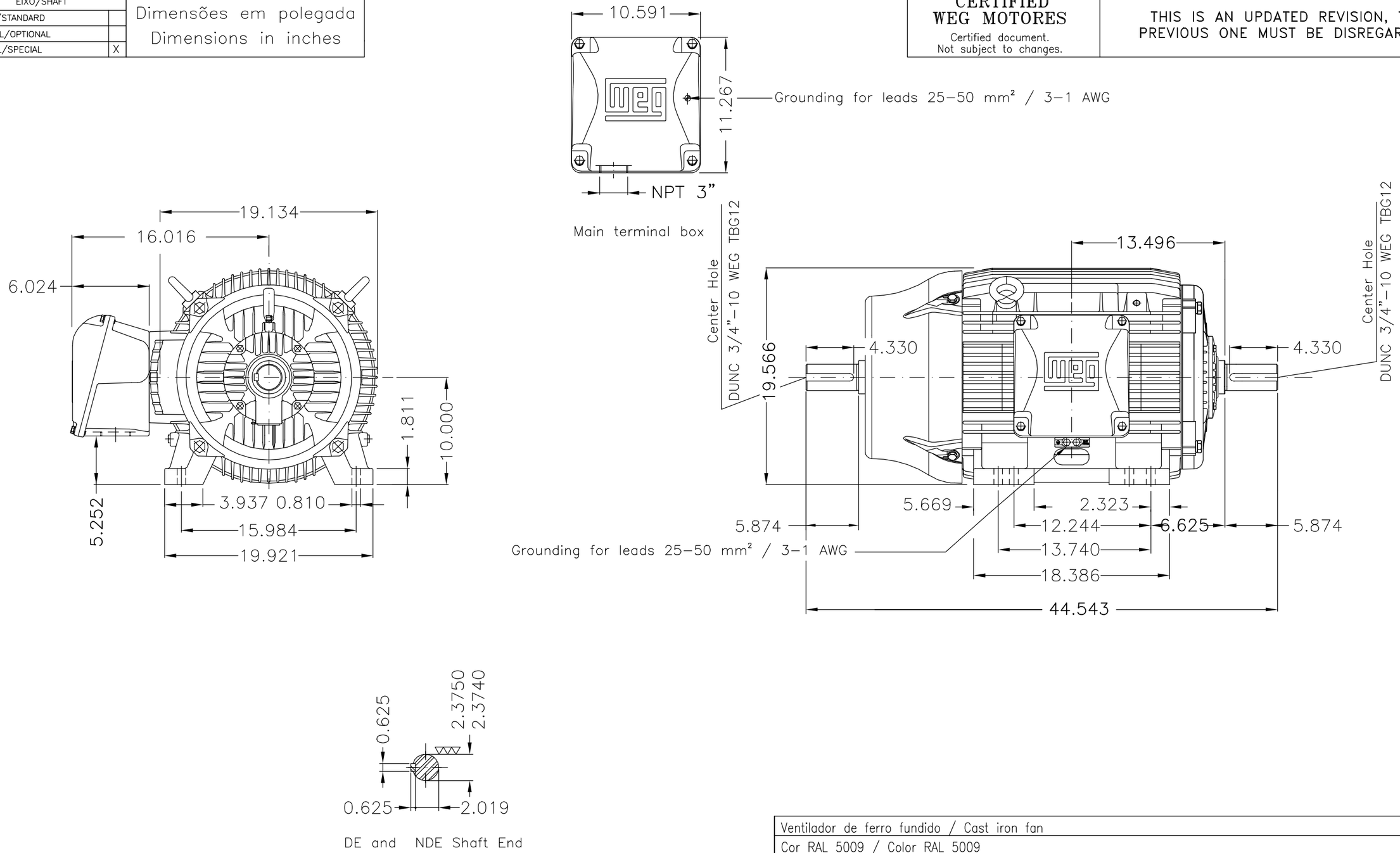

Ventilador de ferro fundido / Cast iron fan
Cor RAL 5009 / Color RAL 5009
Plano de pintura 203A / Painting plan 203A
Forma construtiva NEMA F-1 / Mounting NEMA F-1
Forma construtiva B3D / Mounting B3R(D)

V.J. PAMENSKY CANADA INC.

ECM ECM	LOC LOC	RESUMO MODIFICAÇÃO SUMMARY OF MODIFICATIONS	EXECUTADO EXECUTED	VERIFICADO CHECKED	LIBERADO RELEASED	DATA DATE	VER VER
500001297461		DOCUMENTO NOVO	DVEGINI		NSCHMIDT	12.04.2017	00

EXEC. /EXECUTED	DVEGINI	THREE PHASE W22 MOTOR - NEMA PREMIUM EFF	10004880917
VERIF. /CHECKED		FRAME 404/5TZ IP55 TEFC	000 / 00
LIBER. /RELEASED	NSCHMIDT		
DATA LB /REL DT	12.04.2017	WMO Jaragua do Sul Product Engineering	FOLHA /SHEET 1 / 1

75 HP 06 Poles 60Hz 414631818/0 MEC

A

UNCONTROLLED COPY

RELEASED

ZME A3

Propriedade da WEG. Proibida reprodução sem autorização prévia. / WEG's property. Forbidden reproduction without previous authorization.