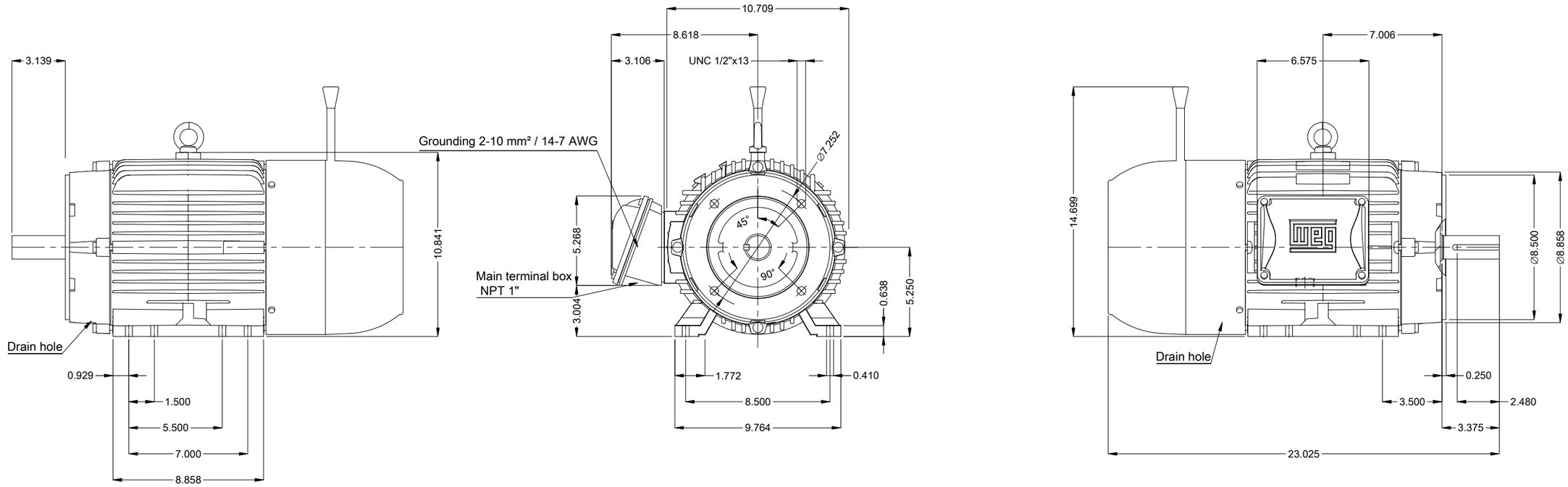


| | |
|---|---|
| Break size 16 (80 Nm) | |
| Brake voltage 525-575 V | |
| Color RAL 5009 | |
| Painting plan 207A | |
| Mounting NEMA F-1 | |
| Mounting B34D | |

DE Shaft End

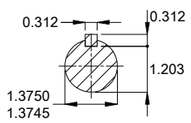


7.5 HP 04 Poles 60 Hz | A

Scale 2 : 13

| ECM | LOC | SUMMARY OF MODIFICATIONS | EXECUTED | CHECKED | RELEASED | DATE | VER |
|---|---|---|---|---|---|---|---|
| | | | HYBRISUSER | | | | 00 |

| | |
|---|---|
| EXECUTED | HYBRISUSER |
| CHECKED | |
| RELEASED | |
| REL. DATE | |

THREE PH. MOTOR W22 BRAKE MOTOR NEMA PREM. EFF.
FRAME 213/5TC IP55 TEFC

PREVIEW

WDD 00

SHEET 1 / 1

Dimensions in inches

A3

WEG's property. Forbidden reproduction without previous authorization.