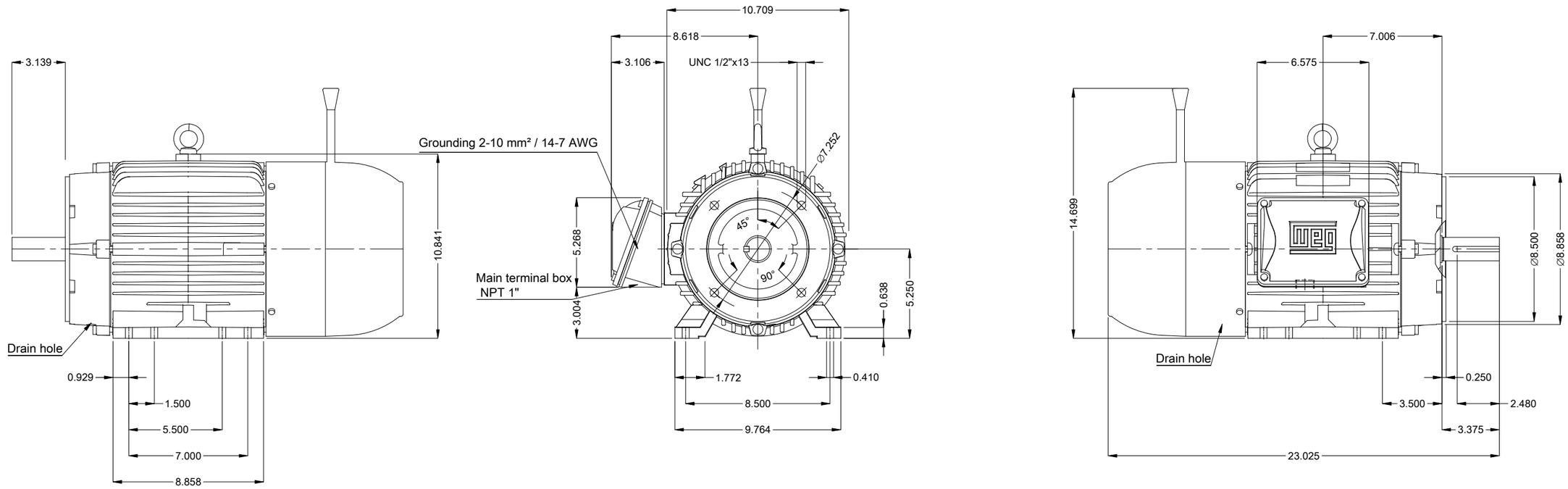

7.5 HP 04 Poles 60 Hz | A

Scale 2 : 13

ECM	LOC	SUMMARY OF MODIFICATIONS	EXECUTED	CHECKED	RELEASED	DATE	VER
			HYBRISUSER				00

Brake voltage 525-575 V	
Break size 16 (80 Nm)	
Color RAL 5009	
Painting plan 207A	
Mounting NEMA F-1	
Mounting B34D	

DE Shaft End

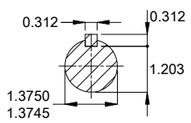

EXECUTED	HYBRISUSER	THREE PH. MOTOR W22 BRAKE MOTOR NEMA PREM. EFF. FRAME 213/5TC IP55 TEFC
CHECKED		
RELEASED		
REL. DATE		

PREVIEW

WDD 00

SHEET 1 / 1

Dimensions in inches

A3

WEG's property. Forbidden reproduction without previous authorization.