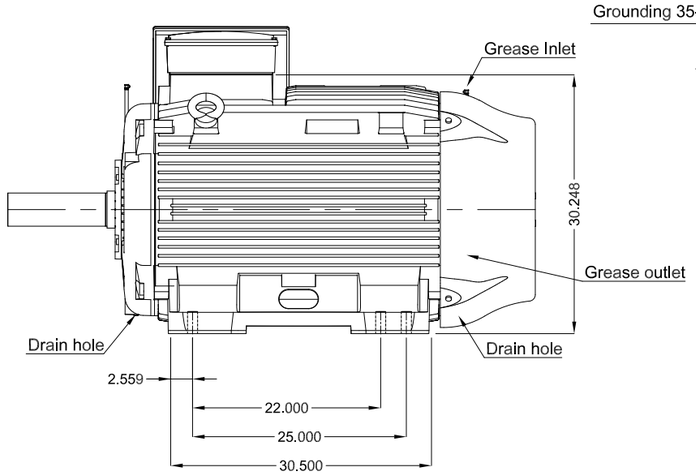

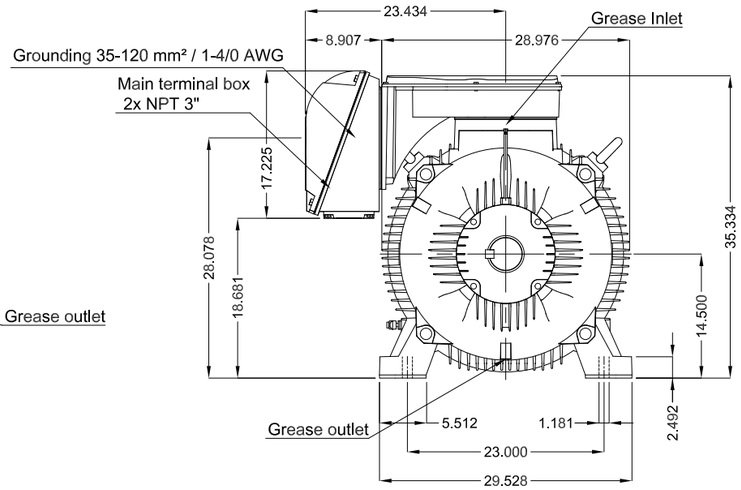

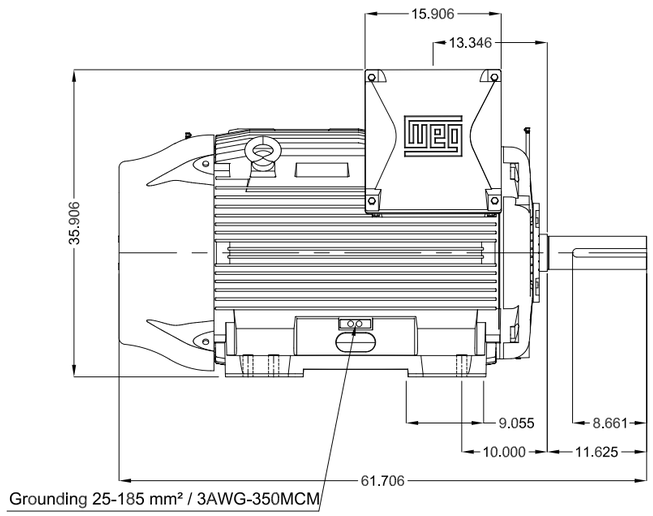

Without vertical jackscrews
DE roller bearing
Grease outlet according to IEEE841
Shaft locking device
NDE endshield with electrically insulated bearing hub
Color RAL 5009
Painting plan 202E
Mounting NEMA F-1
Mounting B3R(D)

DE Shaft End

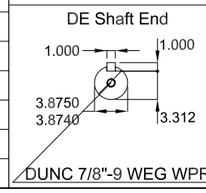

DUNC 7/8"-9 WEG WPR-7339

250 HP 06 Poles 60 Hz | A

ECM	LOC	SUMMARY OF MODIFICATIONS	EXECUTED	CHECKED	RELEASED	DATE	VER
			HYBRISUSER				00

EXECUTED	HYBRISUSER
CHECKED	
RELEASED	
REL. DATE	

THREE PH. MOTOR IEEE 841 W22 NEMA PREM. EFF.
FRAME 586/7T IP55 TEFC

PREVIEW
WDD 00
SHEET /

Dimensions in inches
A3

WEG's property. Forbidden reproduction without previous authorization.