EIXO/SHAFT	
PADRÃO/STANDARD	
OPCIONAL/OPTIONAL	
ESPECIAL/SPECIAL	X

Dimensões em polegada
Dimensions in inches

CERTIFIED WEG MOTORES
Certified document.
Not subject to changes.

THIS IS AN UPDATED REVISION, THE PREVIOUS ONE MUST BE DISREGARDED.

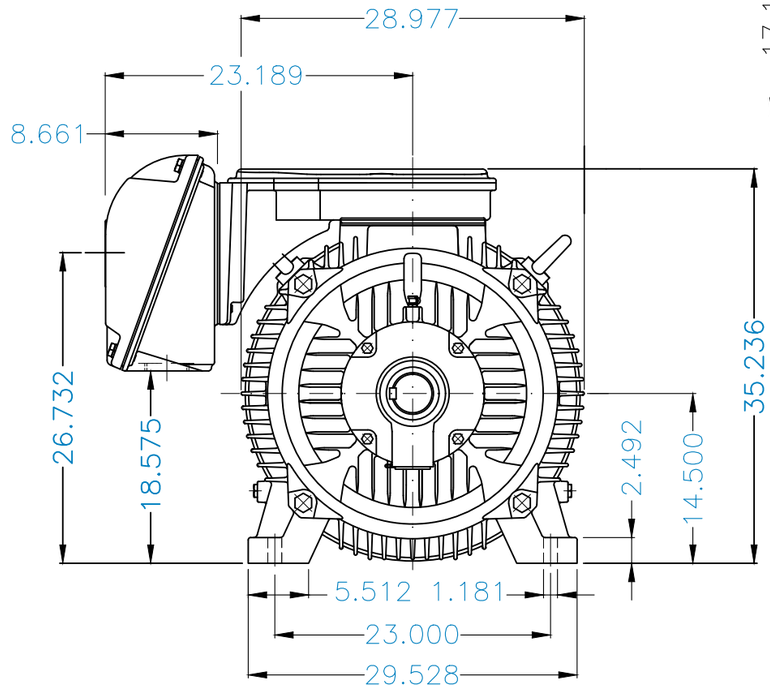

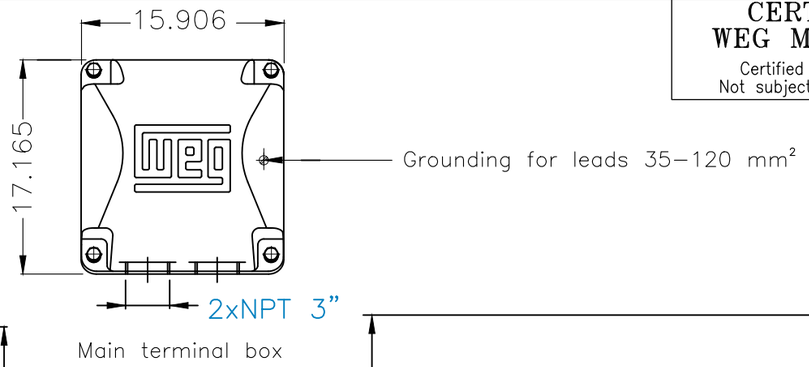

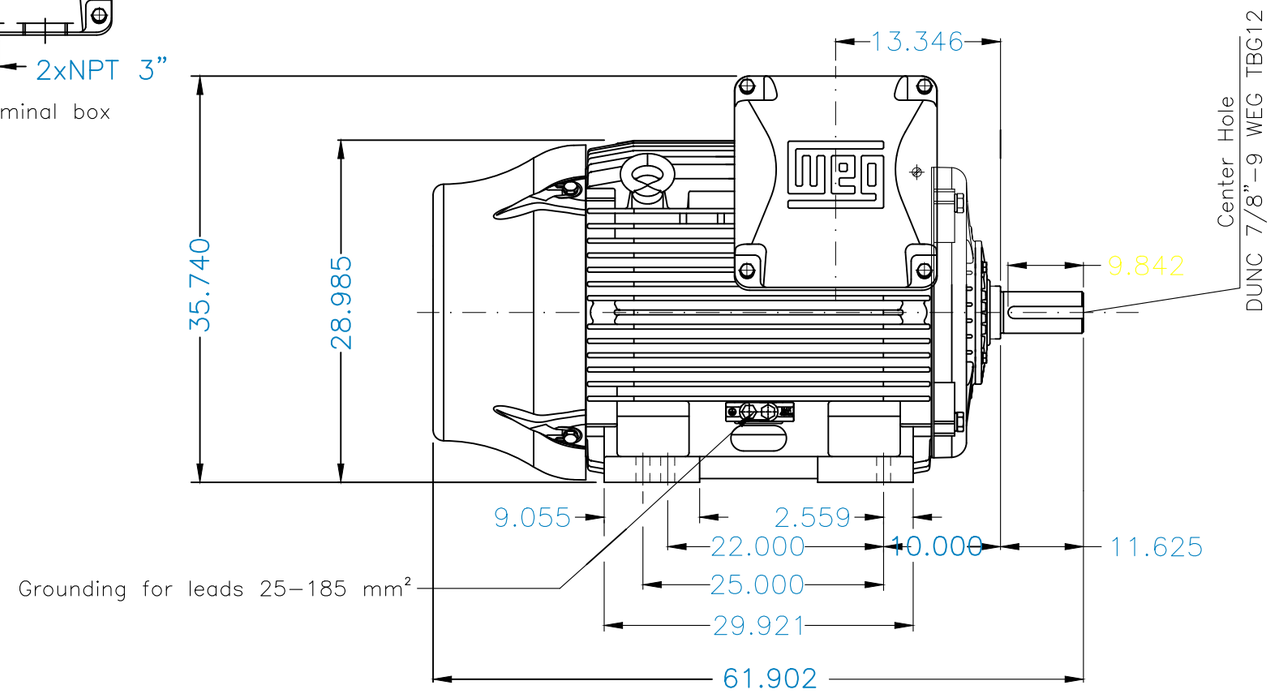

Fixar o conduíte no suporte com abraçadeiras.
Fasten the conduit on support with cables ties.

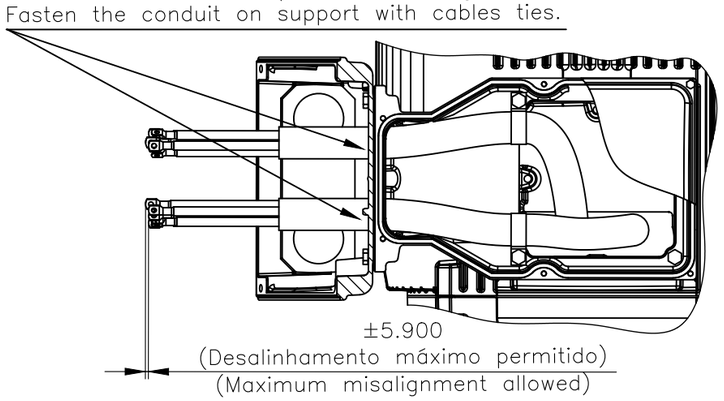

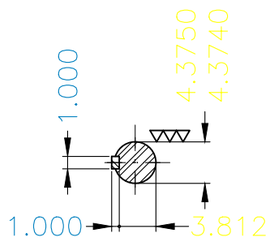

DE Shaft End

500 HP	04 Poles	60Hz			J
500 HP	06 Poles	60Hz			I
450 HP	04 Poles	60Hz			H
450 HP	06 Poles	60Hz			G
400 HP	04 Poles	60Hz			F
400 HP	06 Poles	60Hz			E
350 HP	04 Poles	60Hz			D
350 HP	06 Poles	60Hz			C
300 HP	04 Poles	60Hz			B
300 HP	06 Poles	60Hz	414149741/0	MEC	A

Preencher com graxa 3/4 do volume interno disponível no anel de fixação interno Fill with grease 3 / 4 of the internal volume available in the internal bearing
Linha do motor: Crusher Duty / Motor purpose: Crusher Duty
Rolamento dianteiro de rolos / DE roller bearing
Tampa dianteira especial / Special DE endshield
Dispositivo de travamento de eixo / Shaft locking device
Rolamento dianteiro de rolos NU–324 / NU–324 DE roller bearing
Proteção térmica para desligamento – termostato 155°C Thermal protection to switch off – thermostat 155°C
Tampa traseira com mancal eletricamente isolado NDE endshield with electrically insulated bearing hub
Cor RAL 5009 / Color RAL 5009
Plano de pintura 203A / Painting plan 203A
Forma construtiva NEMA F–1 / Mounting NEMA F–1
Forma construtiva B3D / Mounting B3R(D)

WEG ELECTRIC CORPORATION - WEC

ECM	LOC	SUMMARY OF MODIFICATIONS	EXECUTED	CHECKED	RELEASED	DATE	VER
500003081302		PCR 100000335186	DOGE	LEDUARDO	LEDUARDO	11.11.2025	08
500002620216		ALT CONF CLAIM 422229394	CLAUDEMIRR	SCATOLIN	SCATOLIN	24.04.2024	07

EXECUTED	DVEGINI	THREE PHASE W22 MOTOR - NEMA PREMIUM EFF FRAME 586/7TZ IP55	10004040391
CHECKED	NSCHMIDT		000 / 08
RELEASED	NSCHMIDT		
REL DT	25.01.2016	WMO Jaragua do Sul Product Engineering	SHEET 1 / 1

ZME A3

UNCONTROLLED COPY

RELEASED

WEG's property. Forbidden reproduction without previous authorization.