EIXO/SHAFT	
PADRÃO/STANDARD	X
OPCIONAL/OPTIONAL	
ESPECIAL/SPECIAL	

Dimensões em polegadas
Dimensions in inches

CERTIFIED WEG MOTORES
Certified document.
Not subject to changes.

THIS IS AN UPDATED REVISION, THE PREVIOUS ONE MUST BE DISREGARDED.

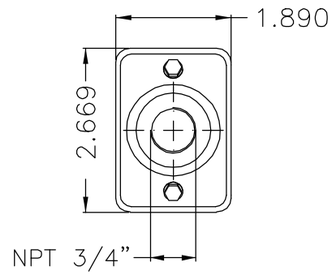

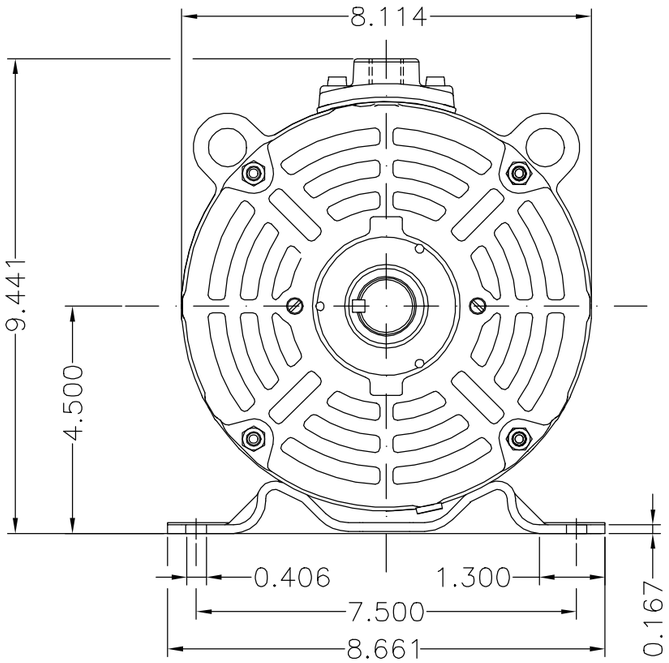

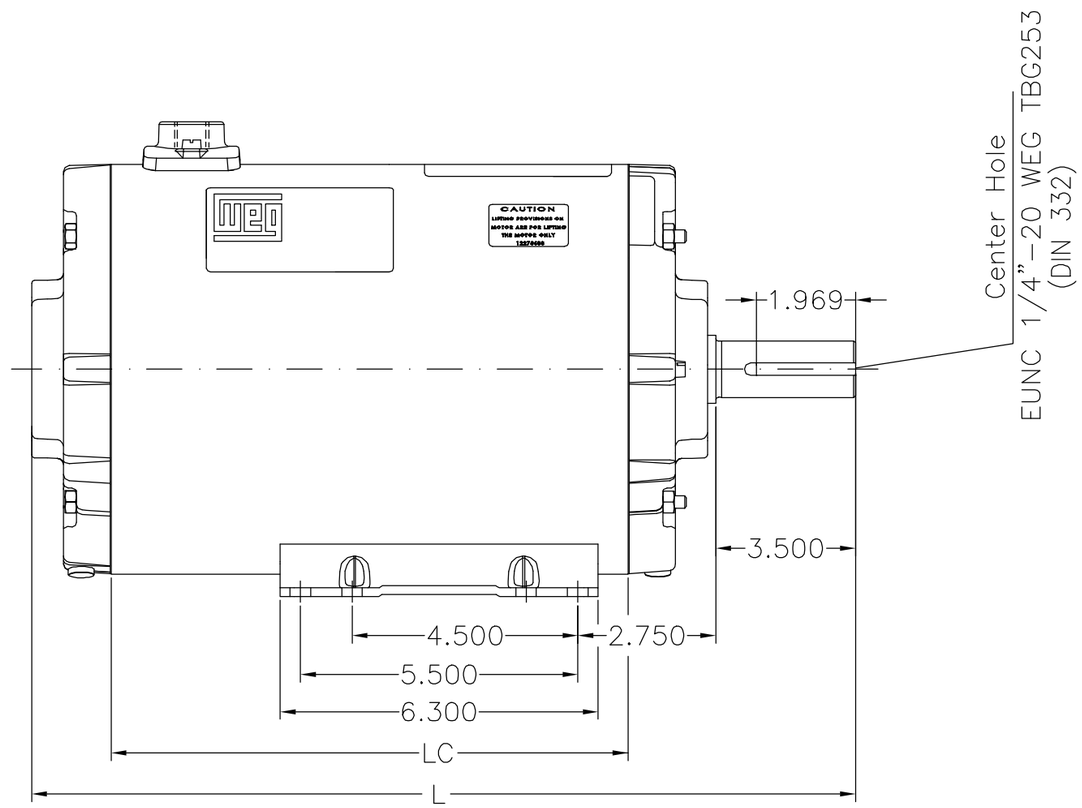

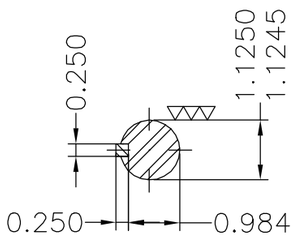

Comprimento do cabo de aterramento 30+2" a partir da base / Grounding lead 30+2" length from base
Comprimento dos cabos de ligação 30+2" a partir da base / Connection leads 30+2" length from base
Etiqueta sobressalente sem logotipos de certificação e sem número de série fornecida em avulso / Spare label without certification logo and without serial number supplied loose
Comprimento dos cabos de acessórios 30+2" a partir da base / Accessories cables length 30+2" from the base
Forma construtiva F-3/B3T / Mounting F-3/B3T

WEG ELECTRIC CORP.

ECM	LOC	SUMMARY OF MODIFICATIONS	EXECUTED	CHECKED	RELEASED	DATE	VER
500001038869	B-6	ALT CONFORME CLAIM 413861030	GEVERSON		ANDERSONLB	21.05.2015	09
500001035390	B-6	ACR. FURO CENTRO ROSCADO	DJONASB		DJONASB	12.05.2015	08

EXECUTED	EDUARDOC1	THREE PHASE ROLLED STEEL MOTOR	10002306870		
CHECKED		FRAME 182/4TZ IP55 (TEAO)	000	09	
RELEASED	JTOGNERI				
REL DT	07.06.2013	WMO JARAGUA DO SUL ENGENHARIA DE PRODUTO	SHEET	1 / 1	

				LC	L	
7.5 / 10 HP	02 Poles	60Hz	413759946	10.236	17.070	C
5 / 7.5 HP	02 Poles	60Hz	413759945	9.449	16.282	B
10 HP	02 Poles	60Hz	412839899	10.236	17.070	A

UNCONTROLLED COPY
RELEASED
ZME A3

WEG's property. Forbidden reproduction without previous authorization.