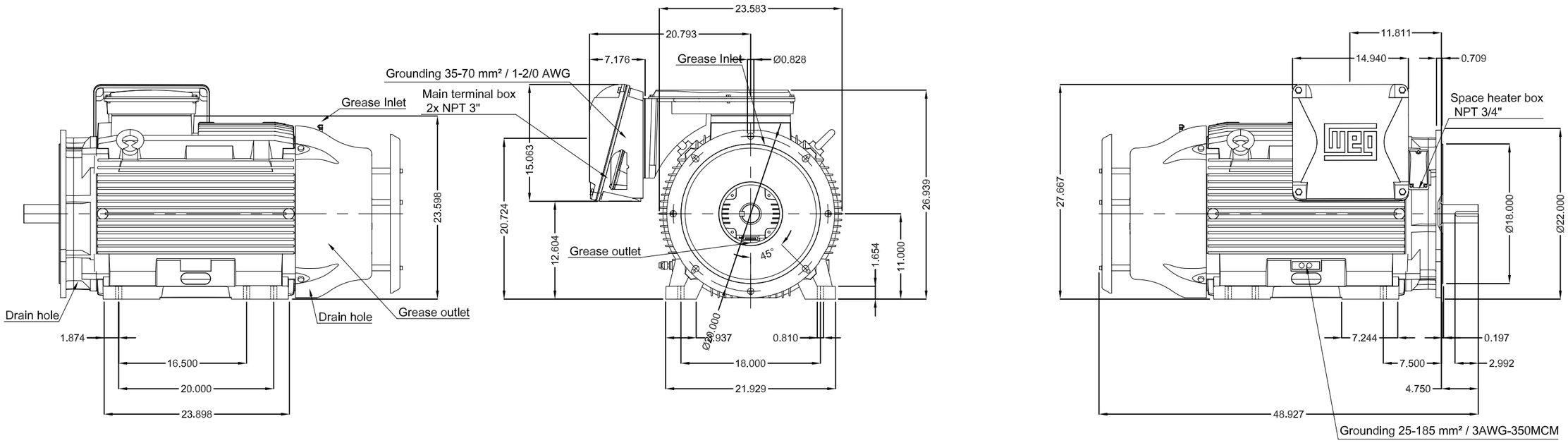

Outlet leads directed to down when looking at shaft end
Without vertical jackscrews
TS shaft end
Space heaters 110 to 127 V
Sealing - Viton oil seal ring
Color RAL 5009
Painting plan 222E
Mounting NEMA W-6
Mounting V15R(D)

DE Shaft End

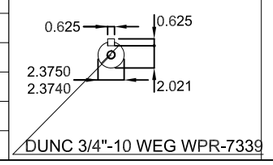

DUNC 3/4"-10 WEG WPR-7339

150 HP 06 Poles 60 Hz | A

ECM	LOC	SUMMARY OF MODIFICATIONS	EXECUTED	CHECKED	RELEASED	DATE	VER
			HYBRISUSER				00

EXECUTED	HYBRISUSER
CHECKED	
RELEASED	
REL. DATE	

THREE PH. MOTOR W22 NEMA PREM. EFF.
FRAME 445/7TSD IP55 TEFC

PREVIEW
WDD 00
SHEET /

Dimensions in inches

A3

WEG's property. Forbidden reproduction without previous authorization.