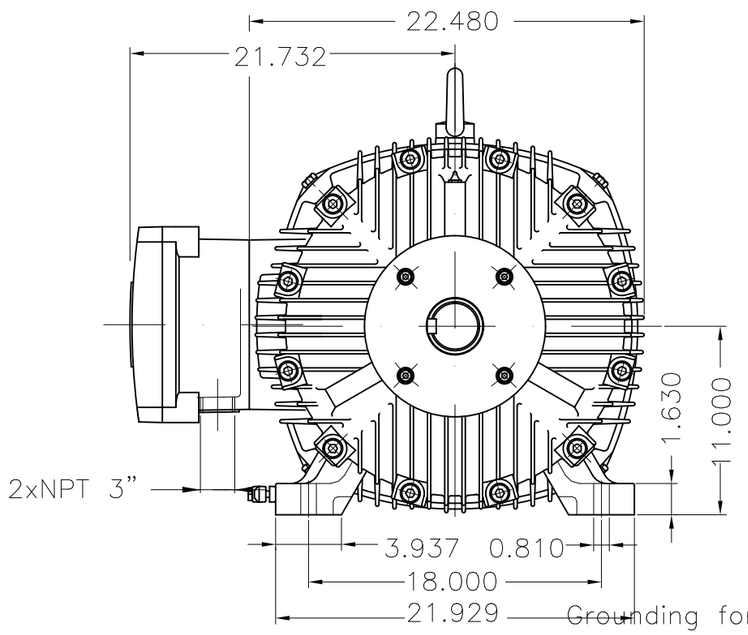

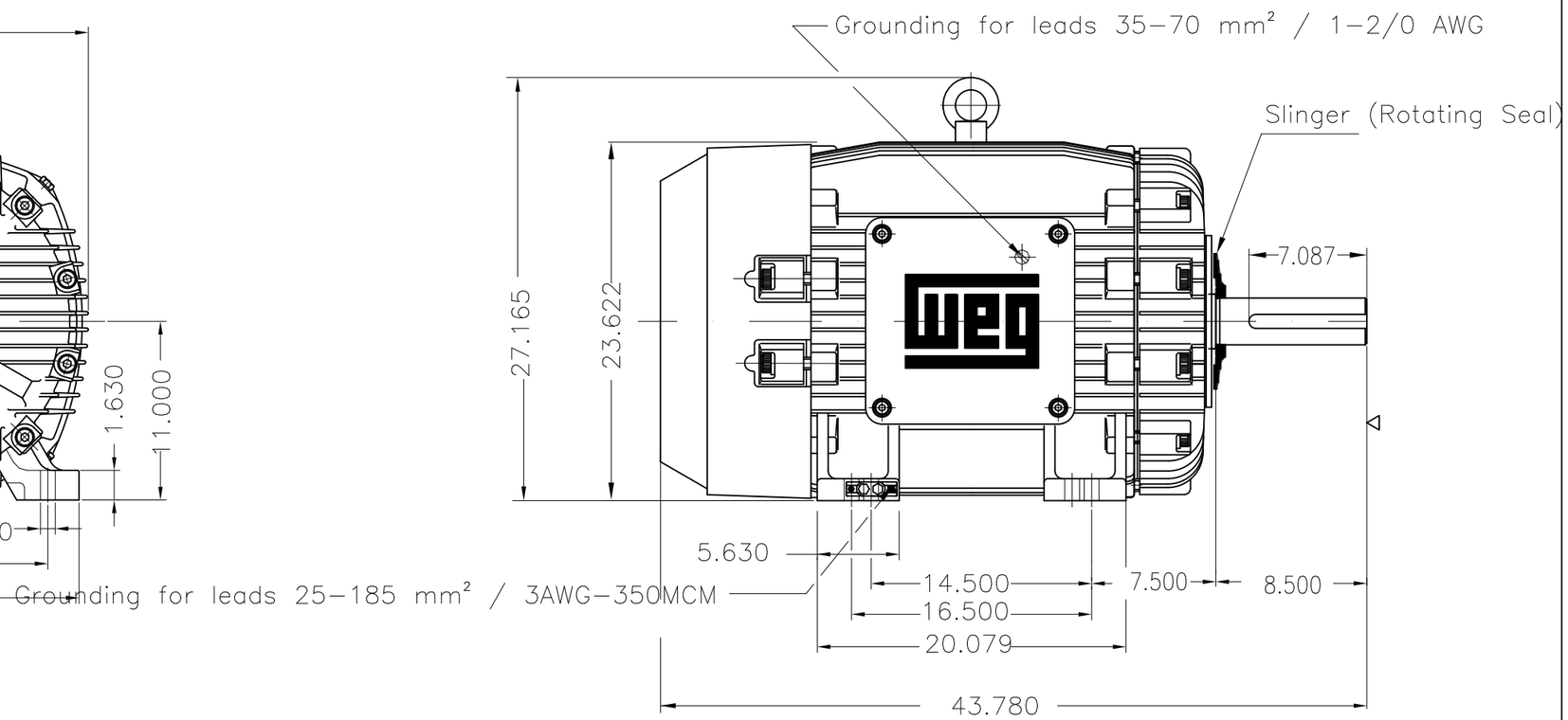

DE Shaft End

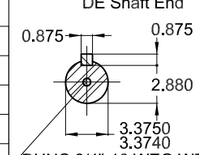

DUNC 3/4"-10 WEG WPR-7339

DE roller bearing
Shaft locking device
Color RAL 5009
Painting plan 222P
Mounting B3R(D)

150 HP 04 Poles 60 Hz | A

ECM	LOC	SUMMARY OF MODIFICATIONS	EXECUTED	CHECKED	RELEASED	DATE	VER
			HYBRISUSER				00

EXECUTED	HYBRISUSER	THREE PH. MOTOR EXPLOSION PROOF NEMA PREM. EFF.
CHECKED		FRAME 444/5T IP55 TEFC
RELEASED		
REL. DATE		WMO Jaragua do Sul Product Engineering

PREVIEW

WDD 00

SHEET 1 / 1

Dimensions in inches

XME A3

WEG's property. Forbidden reproduction without previous authorization.