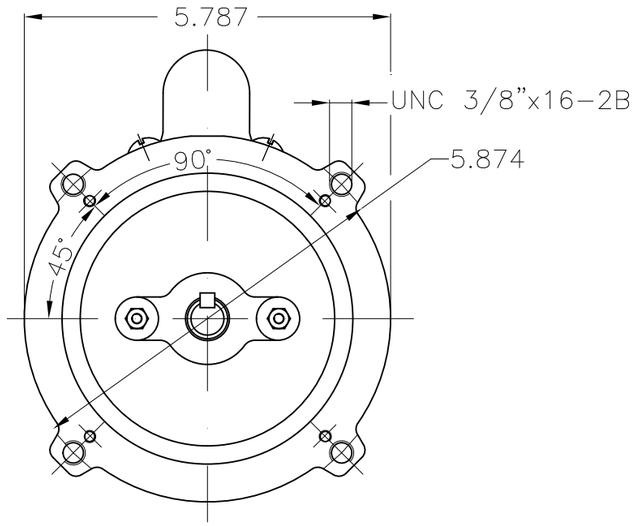


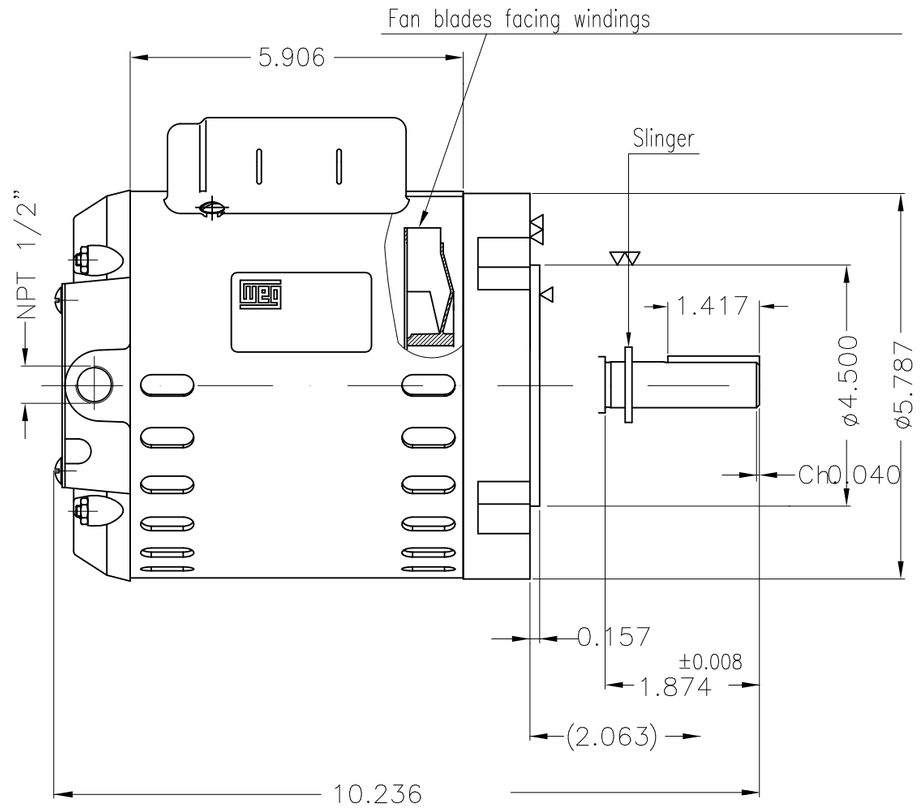


Mounting NEMA F-1

Mounting B14R(D)

| ECM | LOC | SUMMARY OF MODIFICATIONS | EXECUTED | CHECKED | RELEASED | DATE | VER |
|---|---|---|---|---|---|---|---|

EXECUTED DATAVIEWERUSER

CHECKED

RELEASED

REL DT.

SINGLE PH. MOTOR WJET PUMP

FRAME W56C IP21 ODP

PREVIEW

WDD

WMO Jaragua do Sul Product Engineering

SHEET 1 / 1

1/3 HP 02 Poles 60 Hz

A

Dimensions in inches

XME A3

WEG's property. Forbidden reproduction without previous authorization.