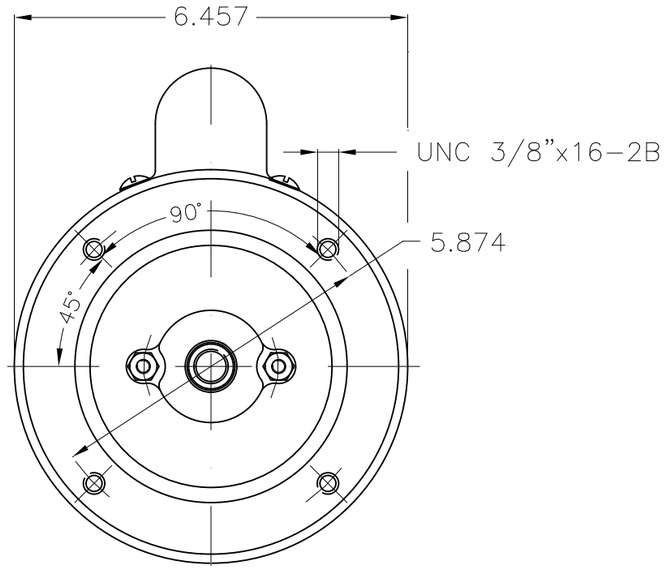

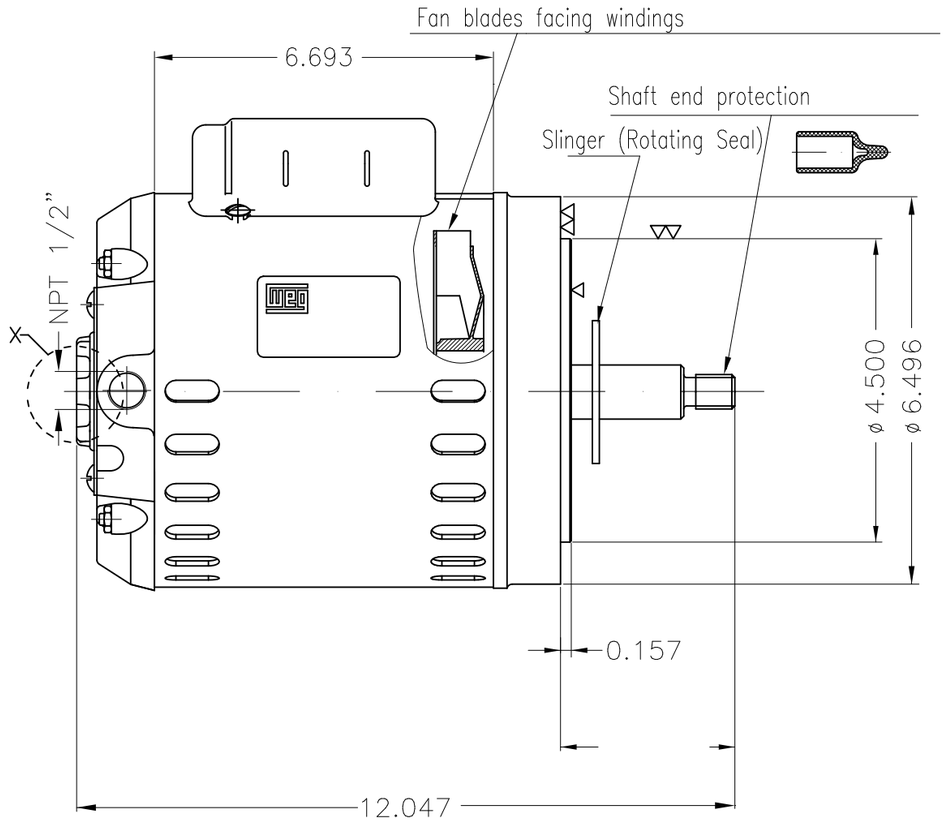

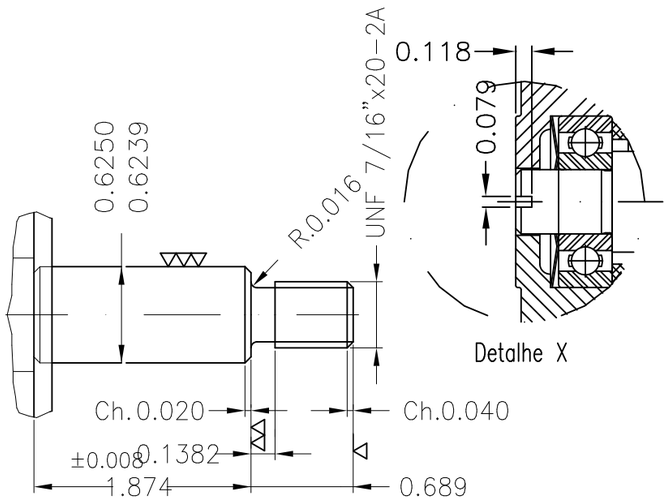

Mounting B14R(D)

ECM	LOC	SUMMARY OF MODIFICATIONS	EXECUTED	CHECKED	RELEASED	DATE	VER

EXECUTED DATAVIEWERUSER
CHECKED
RELEASED
REL DT.

SINGLE PH. MOTOR WJET PUMP
FRAME E56J IP21 ODP

PREVIEW
WDD

WMO Jaragua do Sul Product Engineering

SHEET 1 / 1

1 HP 02 Poles 60 Hz

A

Dimensions in inches

XME A3

WEG's property. Forbidden reproduction without previous authorization.