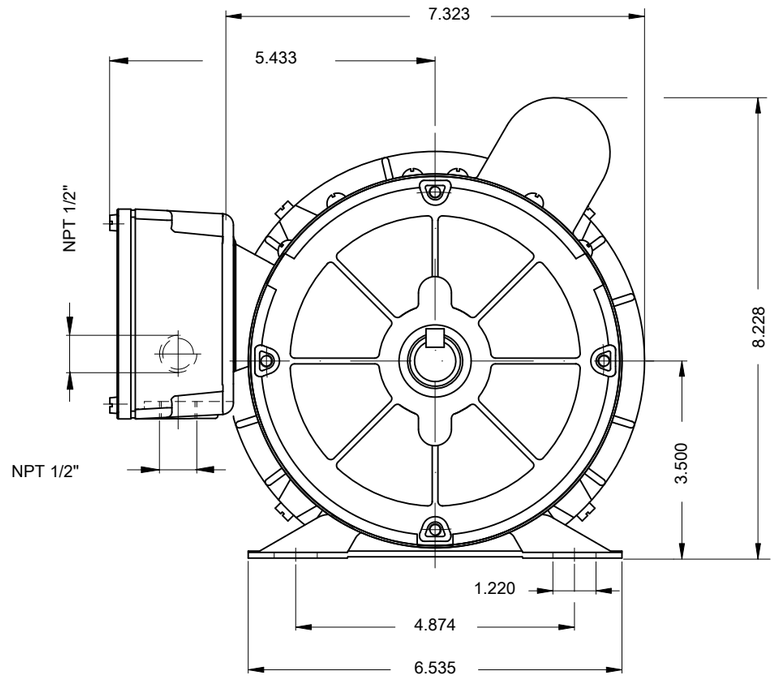

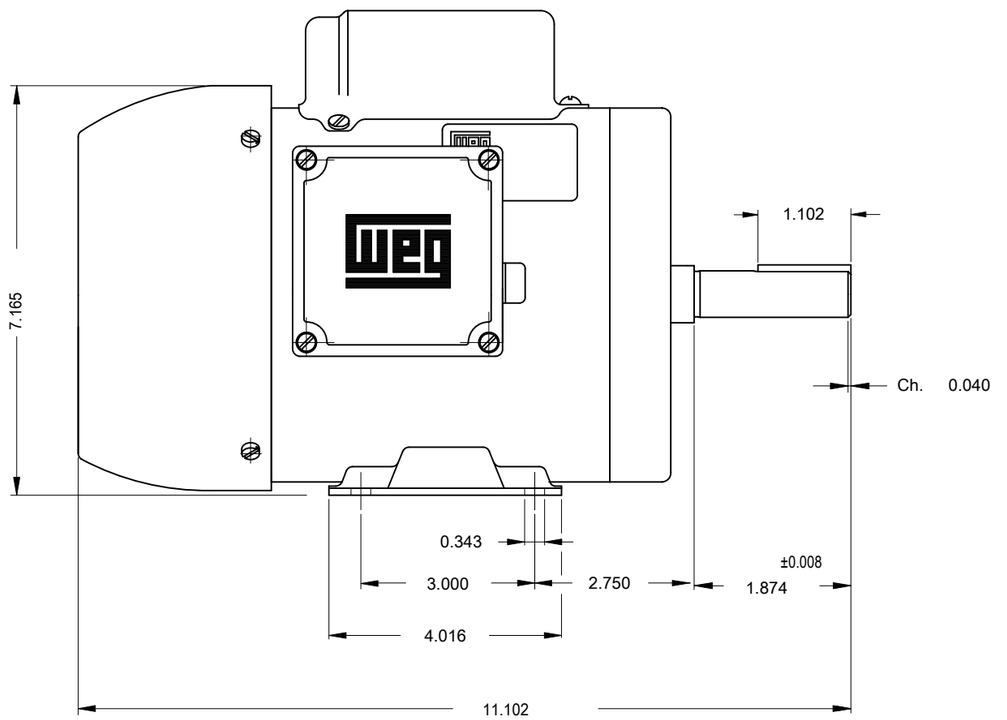

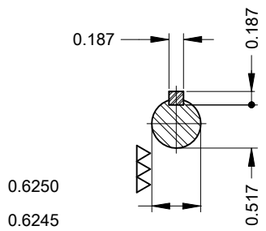

Mounting B3R(D)

ECM	LOC	SUMMARY OF MODIFICATIONS	EXECUTED	CHECKED	RELEASED	DATE	VER
		DATAVIEWERUSER					00

EXECUTED DATAVIEWERUSER
CHECKED
RELEASED
REL. DATE

SINGLE PH. MOTOR FARM DUTY
FRAME B56 IP55 TEFC

PREVIEW
WDD 00

WMO Jaragua do Sul Product Engineering

SHEET 1 / 1

1/2 HP 04 Poles 60 Hz

A

Dimensions in inches

XME A3

WEG's property. Forbidden reproduction without previous authorization.