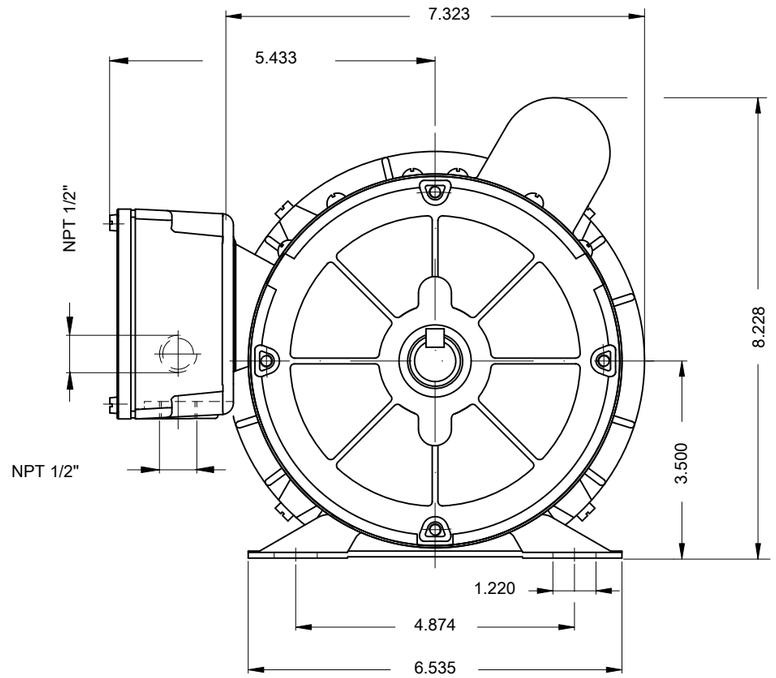

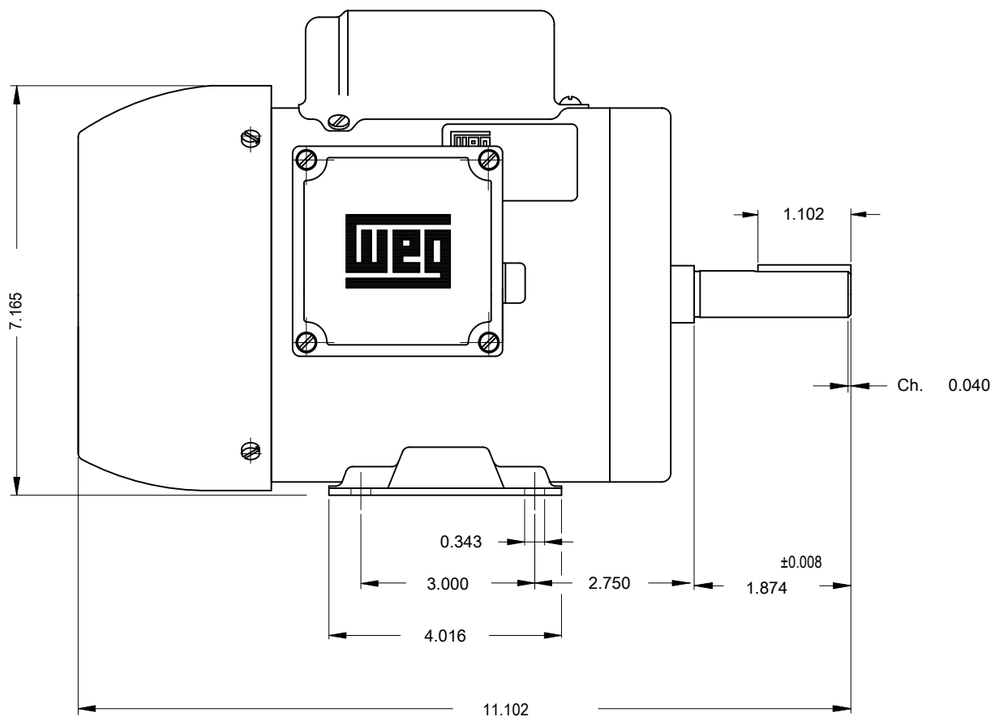

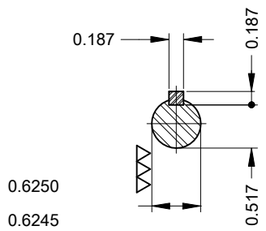

Mounting B3R(D)

ECM	LOC	SUMMARY OF MODIFICATIONS	EXECUTED	CHECKED	RELEASED	DATE	VER
			HYBRISUSER				00

EXECUTED	HYBRISUSER	SINGLE PH. MOTOR FARM DUTY	PREVIEW	
CHECKED		FRAME B56 IP55 TEFC	WDD	00
RELEASED				
REL. DATE		WMO Jaragua do Sul Product Engineering	SHEET	1 / 1

3/4 HP 04 Poles 60 Hz

A

Dimensions in inches

XME A3

WEG's property. Forbidden reproduction without previous authorization.