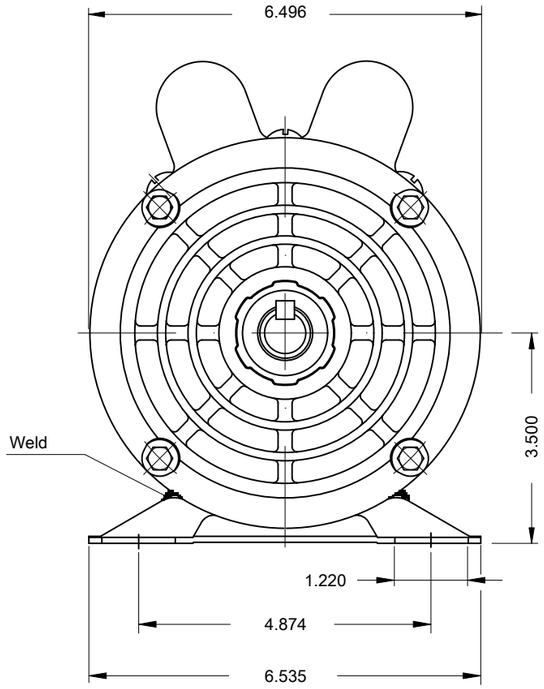

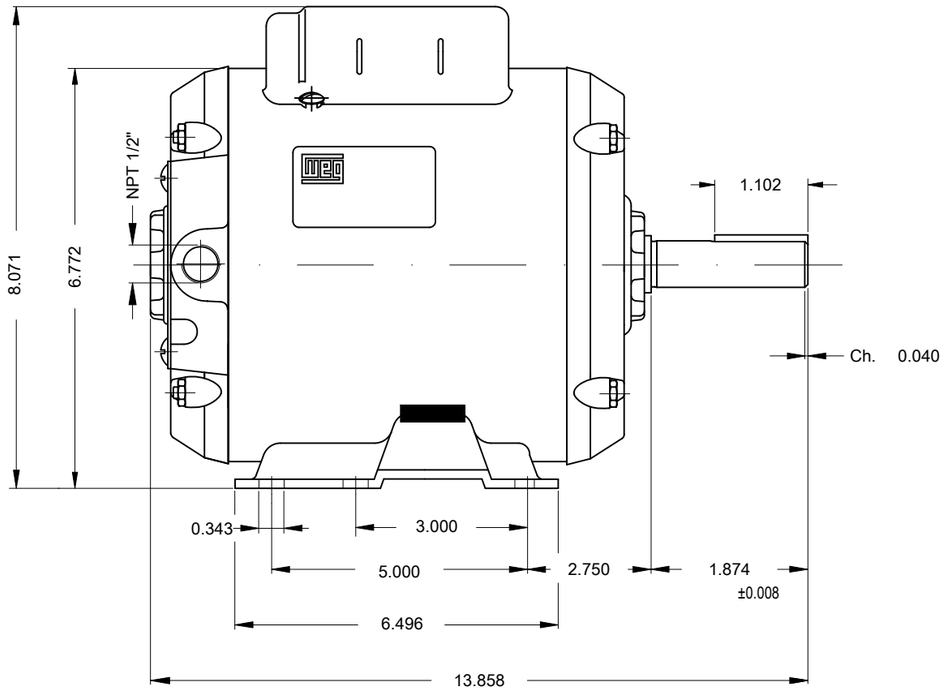

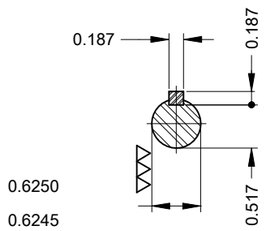

Color Munsell N 1 matte black

Painting plan 207N

Mounting B3R(D)

ECM	LOC	SUMMARY OF MODIFICATIONS	EXECUTED	CHECKED	RELEASED	DATE	VER
			HYBRISUSER				00

EXECUTED	HYBRISUSER	SINGLE PH. MOTOR COMPRESSOR DUTY	PREVIEW
CHECKED		FRAME G56H IP21 ODP	WDD 00
RELEASED			
REL. DATE		WMO Jaragua do Sul Product Engineering	SHEET 1 / 1

5 HP 02 Poles 60 Hz

A

Dimensions in inches

XME A3

WEG's property. Forbidden reproduction without previous authorization.