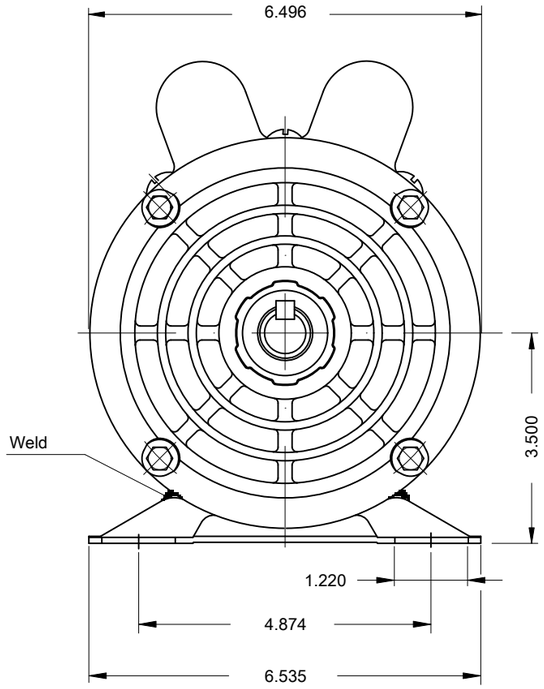


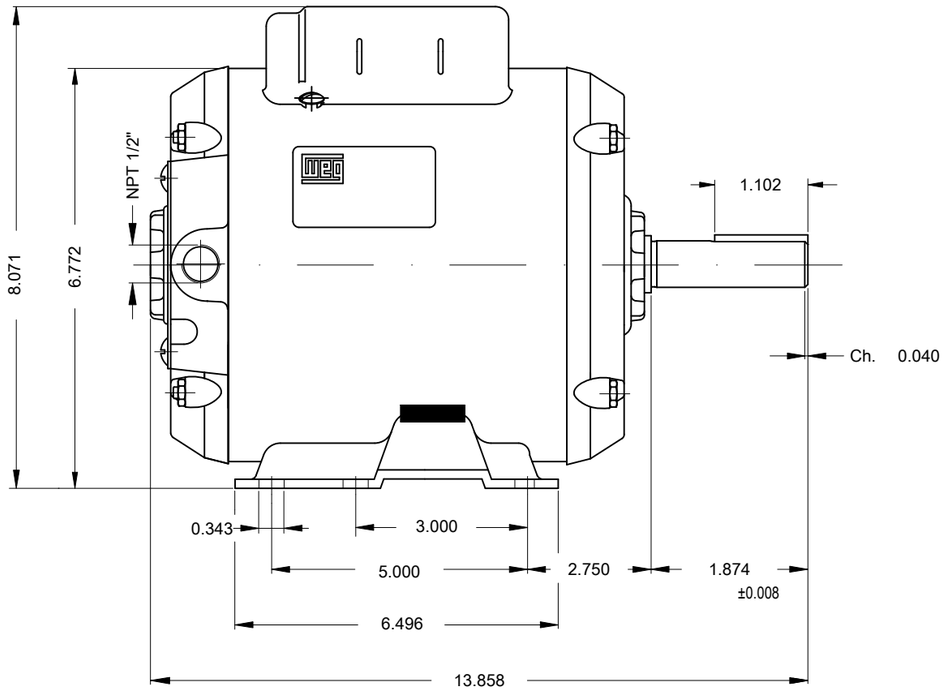


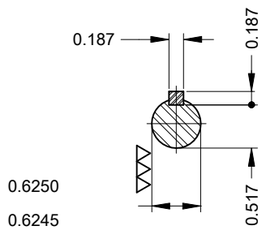


Color Munsell N 1 matte black

Painting plan 207N

Mounting B3R(D)

| ECM | LOC | SUMMARY OF MODIFICATIONS | EXECUTED | CHECKED | RELEASED | DATE | VER |
|---|---|---|---|---|---|---|---|
| | | | HYBRISUSER | | | | 00 |

| | | | |
|---|---|---|---|
| EXECUTED | HYBRISUSER | SINGLE PH. MOTOR COMPRESSOR DUTY | PREVIEW |
| CHECKED | | FRAME G56H IP21 ODP | WDD 00 |
| RELEASED | | | |
| REL. DATE | | WMO Jaragua do Sul Product Engineering | SHEET 1 / 1 |

5 HP 02 Poles 60 Hz

A

Dimensions in inches

XME A3

WEG's property. Forbidden reproduction without previous authorization.