DATA SHEET
Three Phase Induction Motor - Squirrel Cage

Customer	: V.J. PAMENSKY CANADA INC.
Product line	: W01 - TEFC - Nema Premium Efficiency JM Product code : 14329644

Frame	: 254/6JM	Locked rotor time	: 14 s (hot) 25 s (cold)
Output	: 15 HP (11 kW)	Temperature rise	: 80 K
Poles	: 2	Duty cycle	: S1
Frequency	: 60 Hz	Ambient temperature	: -20 °C to +40 °C
Rated voltage	: 575 V	Altitude	: 3280 ft
Rated current	: 13.9 A	Protection degree	: IP55
L. R. Amperes	: 94.7 A	Cooling method	: IC411 - TEFC
LRC	: 6.8	Mounting	: F-1/B34R(D)
No load current	: 4.16 A	Rotation¹	: Both
Rated speed	: 3525 rpm	Noise level²	: 75.0 dB(A)
Slip	: 2.08 %	Vibration class	: A
Rated torque	: 22.1 ft.lb	Starting method	: Direct On Line
Locked rotor torque	: 200 %	Approx. weight³	: 175 lb
Pull up torque	: 150 %	Painting plan	: 207N
Breakdown torque	: 300 %	Color	: MUNSELL N 1 - MATTE
Insulation class	: F	Design	: B
Service factor	: 1.15		
Moment of inertia (J)	: 0.8709 sq.ft.lb		

Output	50%	75%	100%
Efficiency (%)	89.5	91.0	91.0
Power Factor	0.73	0.83	0.87

	Load type	: -
	Load torque	: -
	Load inertia (J=GD²/4)	: -

	Drive end	Non drive end
Bearing type #1	6309-Z-C3	6208-Z-C3
Bearing type #2	-	-
Lubrication interval	15797 h	20000 h
Lubricant amount #1	13 g	8 g
Lubricant amount #2	-	-
Lubricant type	MOBIL POLYREX EM	

Foundation loads
Max. traction :
Max. compression :

Notes
See notes on page 2.

Losses at normative operating points (speed;torque), in percentage of rated output power

P1 (0,9;1,0)	P2 (0,5;1,0)	P3 (0,25;1,0)	P4 (0,9;0,5)	P5 (0,5;0,5)	P6 (0,5;0,25)	P7 (0,25;0,25)
10.0	8.2	7.4	5.5	3.5	2.5	1.7

This revision replaces and cancel the previous one, which must be eliminated.
(1) Looking the motor from the shaft end.
(2) Measured at 1m and with tolerance of +3dB(A).
(3) Approximate weight, subject to be changed after manufacturing process.

These are average values based on tests with sinusoidal power supply, subject to the tolerances stipulated in NEMA MG 1-12.

Rev.	Changes Summary	Rev.	Checked	Date

Performed by	farazq		1865176614	
Checked by	AUTOMATICO		Page	Rev.
Date	24/06/2026		1 / 2	0

This document is exclusive property of WEG S/A. Reprinting is not allowed without written authorization of WEG S/A.

DATA SHEET
Three Phase Induction Motor - Squirrel Cage

Customer	: V.J. PAMENSKY CANADA INC.
Product line	: W01 - TEFC - Nema Premium Efficiency JM
Product code	: 14329644

Thermal protection ID	Application	Type	Quantity	Sensing Temperature

Notes

Standards				
	Specification	: MG1 - Part 10	Vibration	: MG1 - Part 7
	Test	: MG1 - Part 12	Tolerance	: MG1 - Part 12
	Noise	: MG1 - Part 9		

This revision replaces and cancel the previous one, which must be eliminated.
(1) Looking the motor from the shaft end.
(2) Measured at 1m and with tolerance of +3dB(A).
(3) Approximate weight, subject to be changed after manufacturing process.

These are average values based on tests with sinusoidal power supply, subject to the tolerances stipulated in NEMA MG 1-12.

Rev.	Changes Summary	Rev.	Checked	Date

Performed by	farazq		1865176614	
Checked by	AUTOMATICO		Page	Rev.
Date	24/06/2026		2 / 2	0

This document is exclusive property of WEG S/A. Reprinting is not allowed without written authorization of WEG S/A.

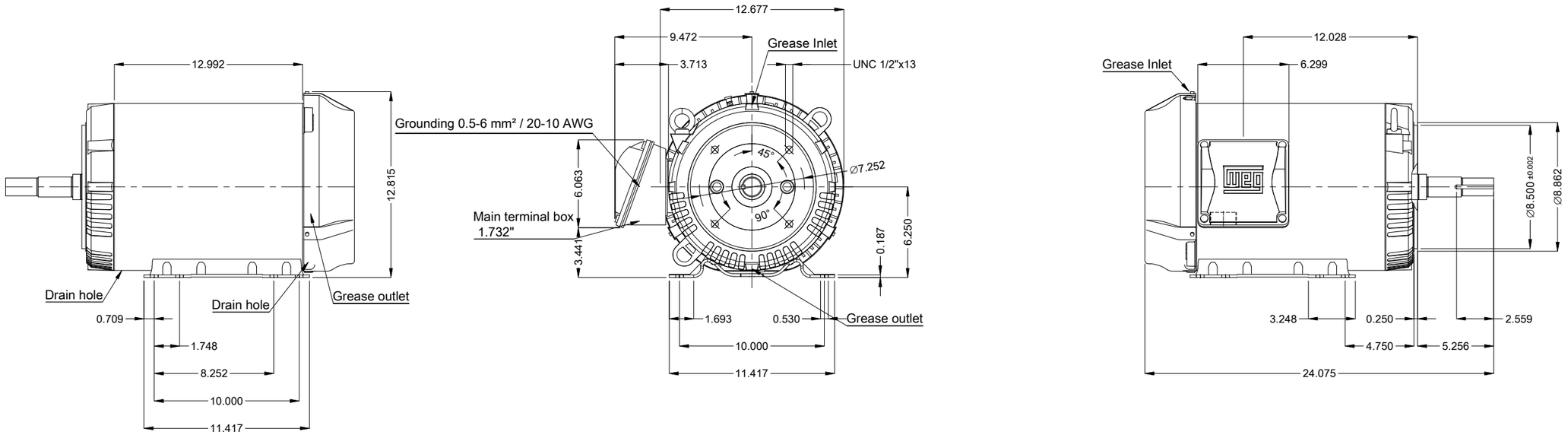

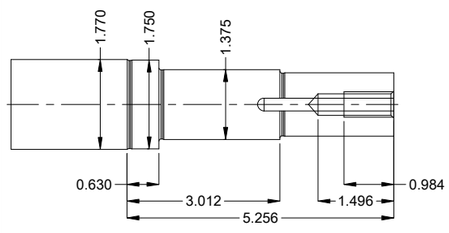

DE Shaft End

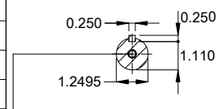

EUNC 1/2"-13 WEG WPR-7309

- Internal AEGIS ground ring on the DE
- Color Munsell N 1 matte black
- Painting plan 207N
- Mounting MARKET F-1/B34R(D)
- Mounting B34D

15 HP 02 Poles 60 Hz | A

Scale 1 : 8

ECM	LOC	SUMMARY OF MODIFICATIONS	EXECUTED	CHECKED	RELEASED	DATE	VER
			HYBRISUSER				00

EXECUTED	HYBRISUSER
CHECKED	
RELEASED	
REL. DATE	

THREE PH. MOTOR ROLLED STEEL JM NEMA PREM. EFF.
FRAME 254/6JM IP55 TEFC

PREVIEW

WDD 00

SHEET 1 / 1

Dimensions in inches

A3

WEG's property. Forbidden reproduction without previous authorization.