DATA SHEET

Three Phase Induction Motor - Squirrel Cage

Customer	: V.J. PAMENSKY CANADA INC.
Product line	: Special Motor

Frame	: 56CZ	Locked rotor time	: 16 s (hot) 29 s (cold)
Output	: 2 HP (1.5 kW)	Temperature rise	: 105 K
Poles	: 4	Duty cycle	: S1
Frequency	: 60 Hz	Ambient temperature	: -20 °C to +40 °C
Rated voltage	: 230/460 V	Altitude	: 3280 ft
Rated current	: 6.04/3.02 A	Protection degree	: IP55
L. R. Amperes	: 49.5/24.8 A	Cooling method	: IC410 - TENV
LRC	: 8.2 Code L	Mounting	: F-1/B34R(D)
No load current	: 3.66/1.83 A	Rotation¹	: Both
Rated speed	: 1750 rpm	Noise level²	: -
Slip	: 2.78 %	Vibration class	: A
Rated torque	: 6.00 ft.lb	Starting method	: Direct On Line
Locked rotor torque	: 350.0 %	Approx. weight³	: 51.2 lb
Pull up torque	: 295.0 %	Painting plan	: 207N
Breakdown torque	: 350.0 %	Color	: MUNSELL N 1 - MATTE
Insulation class	: H	Design	: B
Service factor	: 1.00		
Moment of inertia (J)	: 0.1590 sq.ft.lb		

Output	50%	75%	100%
Efficiency (%)	85.5	86.5	86.5
Power Factor	0.48	0.62	0.72

Load type	: -
Load torque	: -
Load inertia (J=GD²/4)	: -

	Drive end	Non drive end
Bearing type	6204-ZZ	6203-ZZ
Lubrication interval	-	-
Lubricant amount	-	-
Lubricant type	MOBIL POLYREX EM	

Foundation loads	
Max. traction	:
Max. compression	:

Notes
See notes on page 2.

This revision replaces and cancel the previous one, which must be eliminated.
(1) Looking the motor from the shaft end.
(2) Measured at 1m and with tolerance of +3dB(A).
(3) Approximate weight, subject to be changed after manufacturing process.

These are average values based on tests with sinusoidal power supply, subject to the tolerances stipulated in NEMA MG 1-12.

Rev.	Changes Summary	Rev.	Checked	Date

Performed by	martint			
Checked by			Page	Rev.
Date	06/03/2026		1 / 2	0

This document is exclusive property of WEG S/A. Reprinting is not allowed without written authorization of WEG S/A.

DATA SHEET
Three Phase Induction Motor - Squirrel Cage

Customer : V.J. PAMENSKY CANADA INC.

Product line : Special Motor

Thermal protection ID	Application	Type	Quantity	Sensing Temperature
1	Winding	Thermostat - 2 wires	1 x Phase	155°C

Notes

Standards				
	Specification	: MG1 - Part 10	Vibration	: MG1 - Part 7
	Test	: MG1 - Part 12	Tolerance	: MG1 - Part 12
	Noise	: MG1 - Part 9		

This revision replaces and cancel the previous one, which must be eliminated.
(1) Looking the motor from the shaft end.
(2) Measured at 1m and with tolerance of +3dB(A).
(3) Approximate weight, subject to be changed after manufacturing process.

These are average values based on tests with sinusoidal power supply, subject to the tolerances stipulated in NEMA MG 1-12.

Rev.	Changes Summary	Rev.	Checked	Date

Performed by	martint			
Checked by			Page	Rev.
Date	06/03/2026		2 / 2	0

This document is exclusive property of WEG S/A. Reprinting is not allowed without written authorization of WEG S/A.

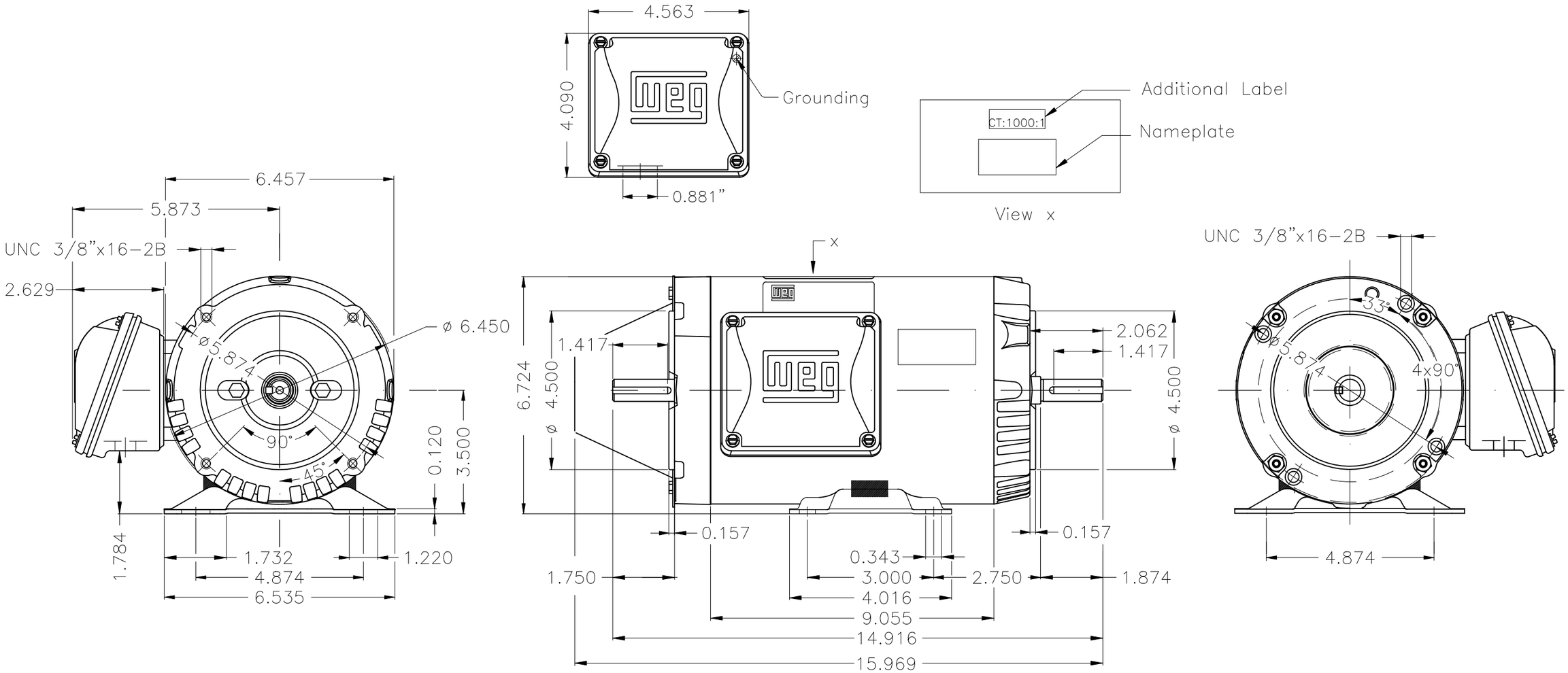

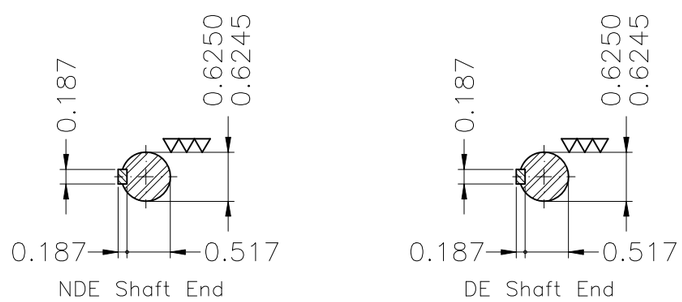

Apto para trabajar para VFD 1000: 1 CT / Suitable to work for VFD 1000:1 CT

Outlet leads directed to down when looking at shaft end

Thermal protection to switch off - thermostat 155°C

Sealing - V ring

Class H insulation - 105K temperature rise

56CZ

Rubber drain plug

Reinforce the foot with 2 mig welding spots

Bearing cap

Adesive label for frequency inverter

Color Munsell N 1 matte black

Painting plan 207N

Mounting B34D

V.J. PAMENSKY CANADA INC.

ECM	LOC	SUMMARY OF MODIFICATIONS	EXECUTED	CHECKED	RELEASED	DATE	VER
		New Drawing	ELIZABETH	FMONROY	FMONROY	21.11.2025	00

EXECUTED	ELIZABETH	THREE PH. MOTOR ROLLED STEEL NEMA PREM. EFF.	1781450253
CHECKED	FMONROY	FRAME 56CZ IP55 TENV	WDD 00
RELEASED	FMONROY		
REL. DATE	21.11.2025	WEG HUEHUETOCA [Ventas Exportacion]	SHEET 1 / 1

2 HP 04 Poles 60 Hz 422913647 A

Dimensions in inches

A3 XME

PRELIMINARY DOCUMENT - Not to be used for installation purposes.

WEG's property. Forbidden reproduction without previous authorization.

10014071861-00